LIVING SPACES

| | | | |
|---|---|---|---|
| A | PT4095-03 End Table | | X1 |
| B | PT4095-03LG | | X4 |

LAURENT

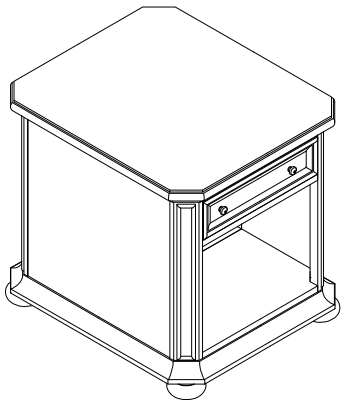
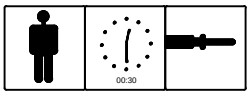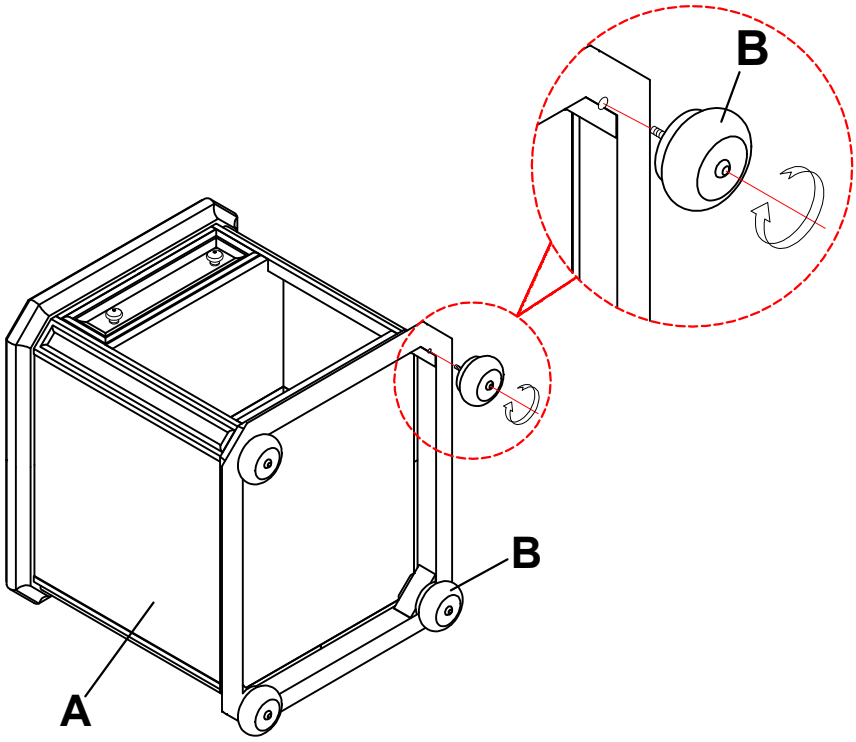
107863/T4095-03
Rectangular End Table