LIVING SPACES

ASSEMBLY INSTRUCTIONS
ITEM : 305-S360-413 / 414

DESK HUTCH - DESK w/TURN BUCKLE BASE

Thank you for purchasing this quality product. Be sure to check all packing material carefully for small Hardware which may have come loose inside the carton during shipment.Identify and count all Hardware and compare with the Hardware List Below.

PART LIST			
No.	Drawing	Descriptions	Qty.
A		Back Panel	1 PC
B		Shelf Top Panel	1 PC
C		Shelf Bottom Panel	1 PC
D		Side Rail (left & right)	2 PCS
E		Metal Rod	1 PC

HARDWARE LIST				
No.	Drawing	Descriptions	Size	Qty.
1		Bolt	1/4" x 35mm	15 PCS
2		Allen Key	M4	1 PC
3		Bolt	1/4" x 20mm	4 PCS
4		Lock washer	1/4"	4 PCS
5		Flat washer	1/4" x 19mm x 2mm	4 PCS
6		Bracket	100 x 25 x 2mm	2 PCS
7		Tipping Restraint		1 SET
TOOLS REQUIRED (NOT PROVIDED)				
		PHILLIPS SCREWDRIVER		

NOTE: Do not fully tighten Bolts until the assembly is completed.

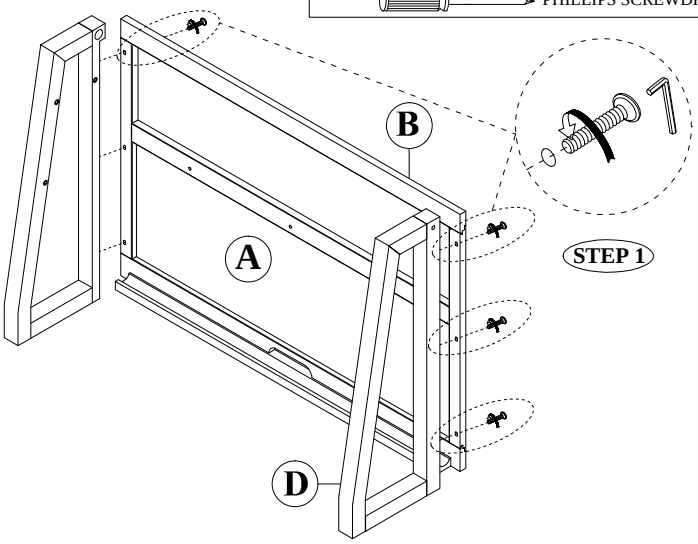

NOTE: Do not fully tighten Bolts until the assembly is completed.

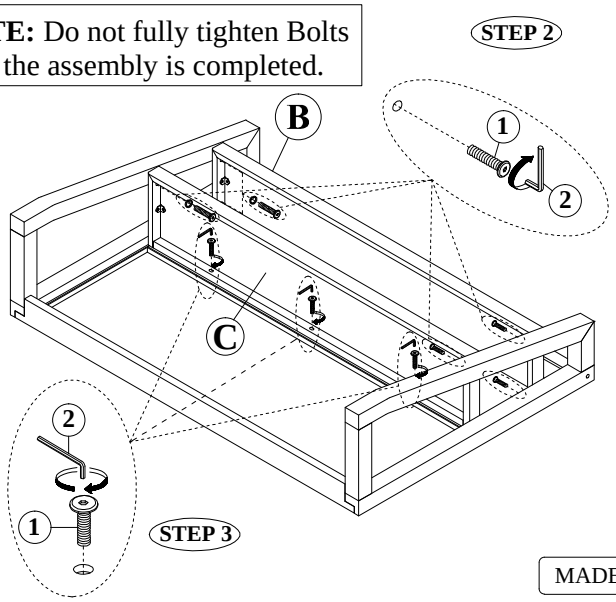

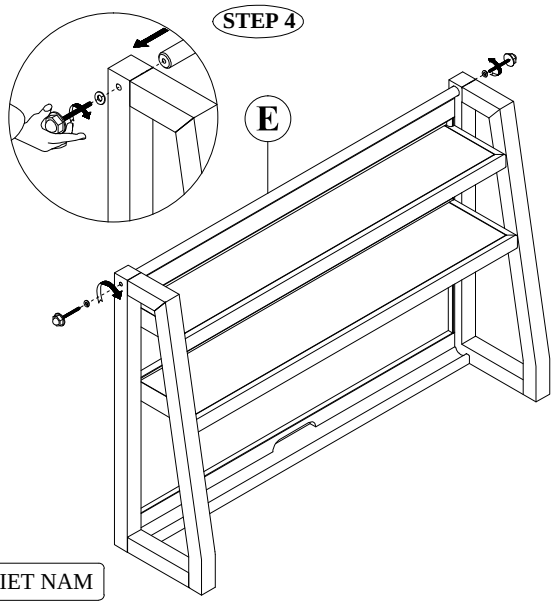

MADE IN VIET NAM

LIVING SPACES

ASSEMBLY INSTRUCTIONS
ITEM : 305-S360-413 / 414
DESK HUTCH - DESK w/TURN BUCKLE BASE

PART LIST		
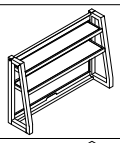	Desk Hutch (305-S360-413)	1 PC
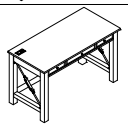	Desk w/turn buckle base (305-S360-414)	1 PC
TOOLS REQUIRED (NOT PROVIDED)		
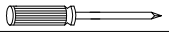 PHILLIPS SCREWDRIVER		

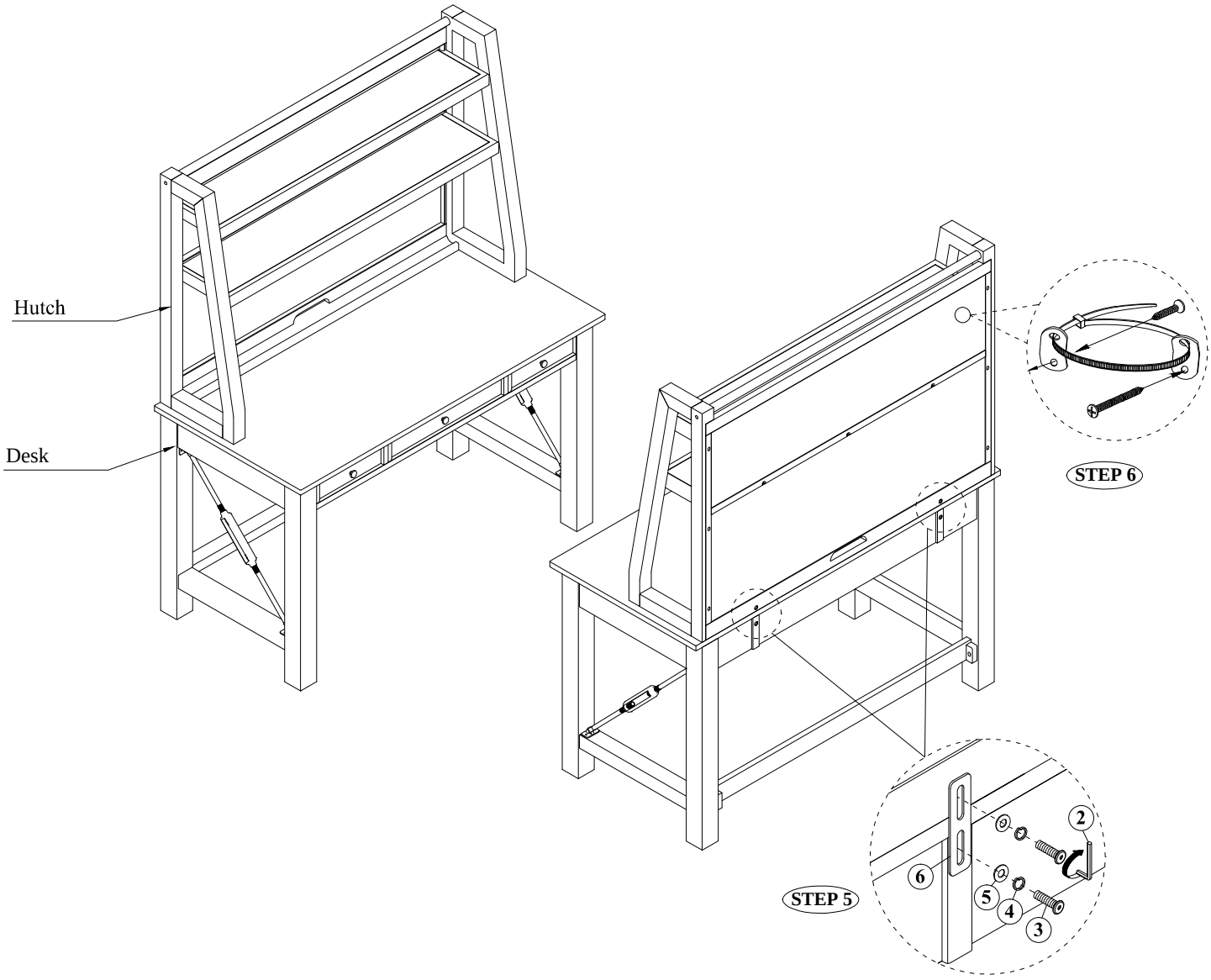

MADE IN VIET NAM