CAPRI OUTDOOR SWIVEL CHAIR
12C057A-W-SV-2-9
Assembly Instruction

Parts List:

REF	PART NAME	PART IMAGE	QTY	REF	PART NAME	PART IMAGE	QTY	REF	PART NAME	PART IMAGE	QTY
A	Chair Frame	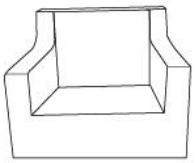	1	B	Chair Base		1	C	Plastic Cap		1

Diagram:

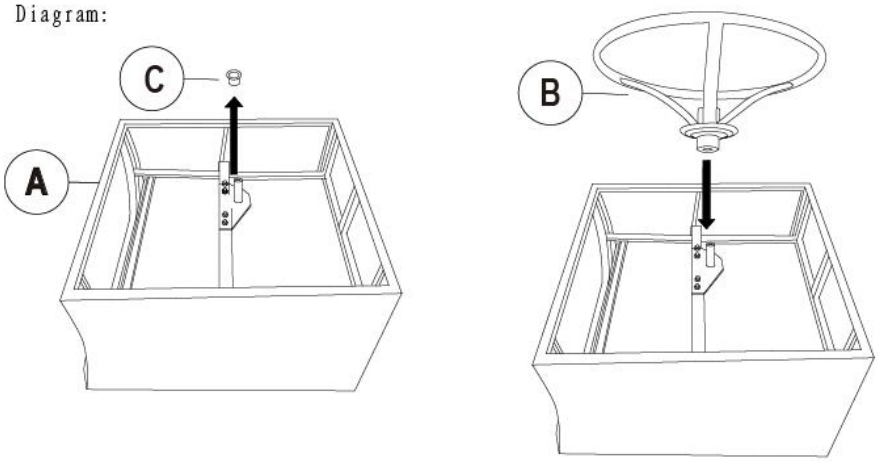

Assembly Steps:

Step 1: Remove protective wraping and lay all parts on floor. Indentify all parts packed in Carton against attached parts list to make sure all parts are presented.

Step 2: Place a protective soft Material on floor.Lay Chair Frame (A) upside down on floor, bottom is facing up. Remove the Plastic Cap(C).

Step 3: Insert the Chair Frame (A) into the Chair Base(B) by inserting the shaft of the chair frame
directly into the bushing portion of the chair base as shown in diagram. Make sure you have inserted it all the way. If you experience difficulty, insert the shaft into the bushing portion by using a twisting motion as you insert.

Then the chair is now ready for use.

NOTE: IT IS USER'S RESPONSIBILITY TO MAKE SURE ALL PARTS ARE ASSEMBLED AND TIGHTENED PROPERLY AND SECURELY.