LIVING SPACES

Dean Storage Twin Bed Assembly Instructions

Hardware included in headboard carton to attach bed feet and side rails.

A1	D	E	F	I	M	J	L	R	Y	Z
Φ8 MM	Φ6 MM	Φ8 MM	H=8 CM Φ8 MM	Φ8 MM	Φ6*40MM	H=26 CM	Φ8*50MM	Φ6*25MM		
2PCS	6PCS	4PCS	4PCS	1PC	2PCS	2PCS	2PCS	4PCS	1PC	4PCS

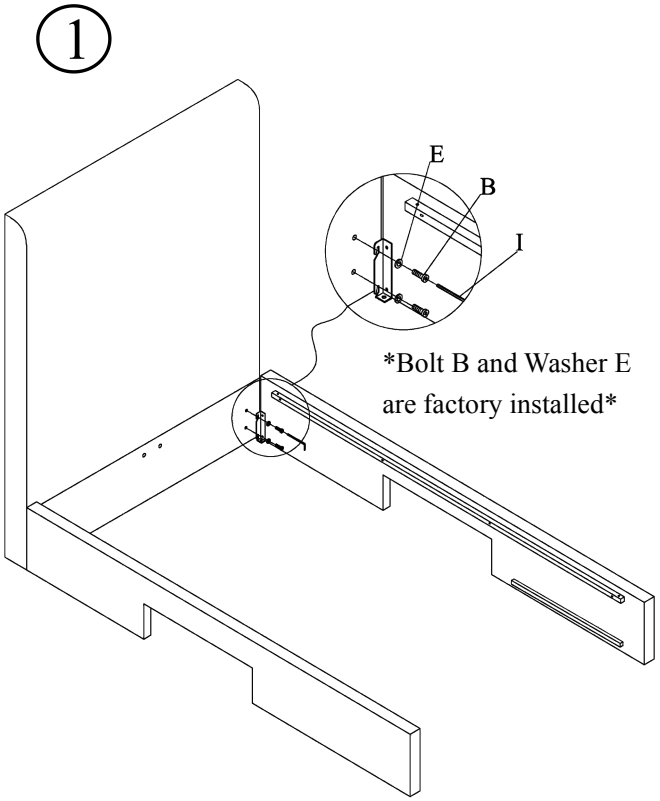

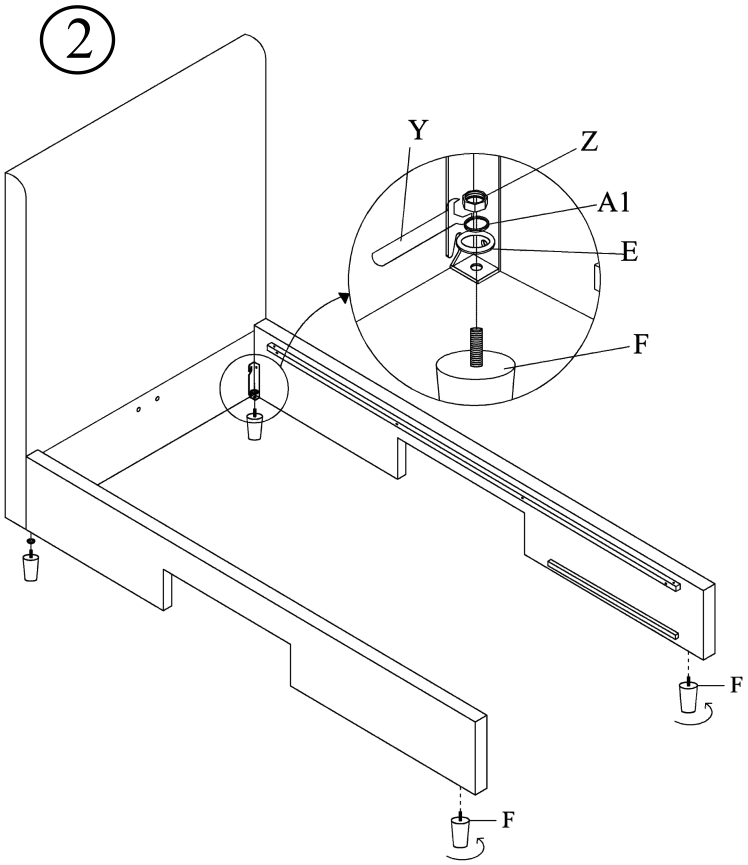

Step#1

Attach side rails to headboard using Wrench (I), Bolt (B) and Washer (E)(factory installed).

Step#2

Retrieve bed feet from carton fastened behind the headboard.

Attach bed feet (F) to the headboard bracket using Nut (Z) , Spring Washer (A1) and Washer (E),Tighten with Wrench (Y)

Attach bed feet (F) to the side rails.

CONGRATULATIONS ON YOUR NEW BED PURCHASE

~Warning：do not move bed after final assembly as it may result in damages to floor and/or bed.~

Dean Storage Twin Bed Assembly Instructions

Hardware included in side rails carton to attach center support system..

O	P	U
1PC	12PCS	1PC

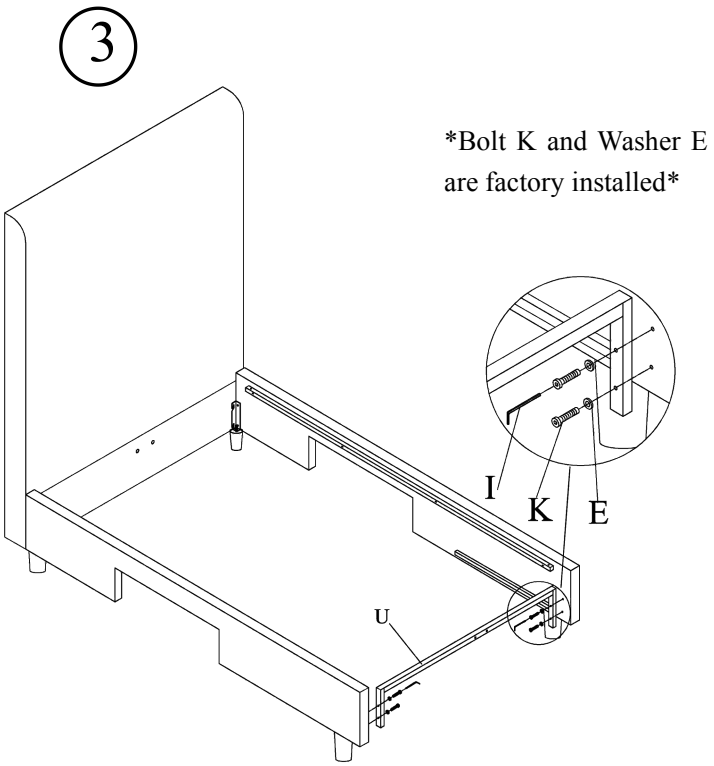

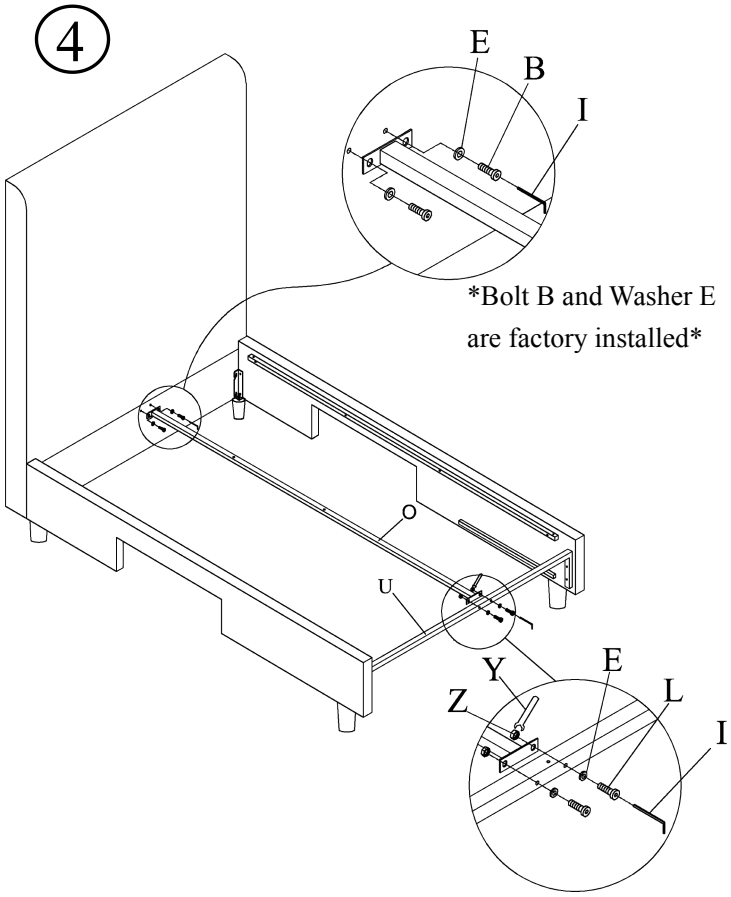

Step#3

Attach Metal support beam (U) to side rails using Wrench (I), Bolt (K) and Washer (E) (factory installed).

Step#4

Attach center support rail (O) to the headboard using Wrench (I), Bolt (B) and Washer (E) (factory installed).

Attach center support rail (O) to the Metal support beam (U) using Wrench (I), Bolt (L) ,Washer (E) and Nut (Z). Tighten/secure center support rail with Wrench (Y) .

CONGRATULATIONS ON YOUR NEW BED PURCHASE

~Warning：do not move bed after final assembly as it may result in damages to floor and/or bed.~

LIVING SPACES

Dean Storage Twin Bed Assembly Instructions

Hardware included in headboard carton to attach bed feet and side rails.

A1	D	E	F	I	M	J	L	R	Y	Z
Φ8 MM	Φ6 MM	Φ8 MM	H=8 CM Φ8 MM	Φ8 MM	Φ6*40MM	H=26 CM	Φ8*50MM	Φ6*25MM		
2PCS	6PCS	4PCS	4PCS	1PC	2PCS	2PCS	2PCS	4PCS	1PC	4PCS

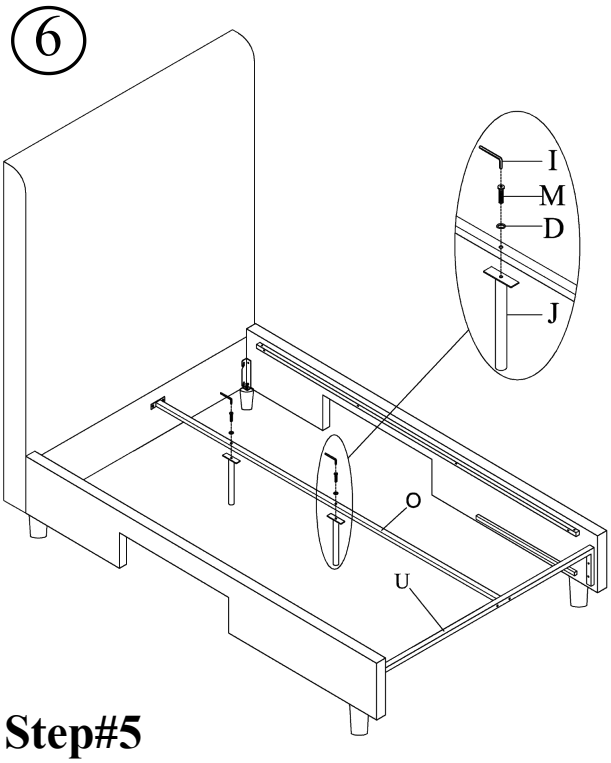

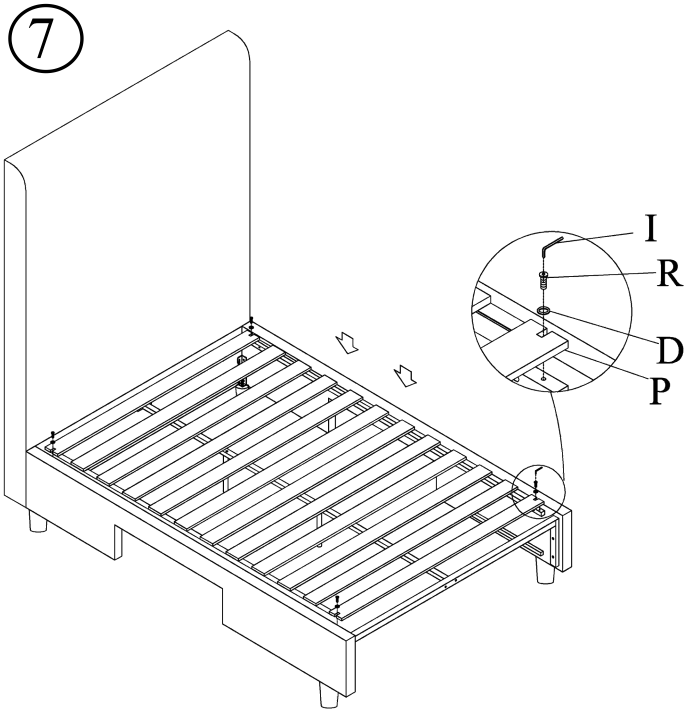

Step#5

Locate bed in final position before attaching center supports.

Step#6

Attach center support legs (J) to the Center support rail (O) using Wrench (I), Bolt (M) and Washer (D).

Step#7

Lay the flat wooden slats on the support rails,fix the slats using Wrench (I), Bolt (R) and Washer (D).

CONGRATULATIONS ON YOUR NEW BED PURCHASE

~Warning：do not move bed after final assembly as it may result in damages to floor and/or bed.~

Dean Storage Twin Bed Assembly Instructions

Hardware included in storage drawer carton.

A	B	C	D	E	I
Φ6*15MM	Φ8*30 MM	H=8 CM	Φ6 MM	Φ8 MM	
32PCS	16PCS	16PCS	32PCS	16PCS	1PC

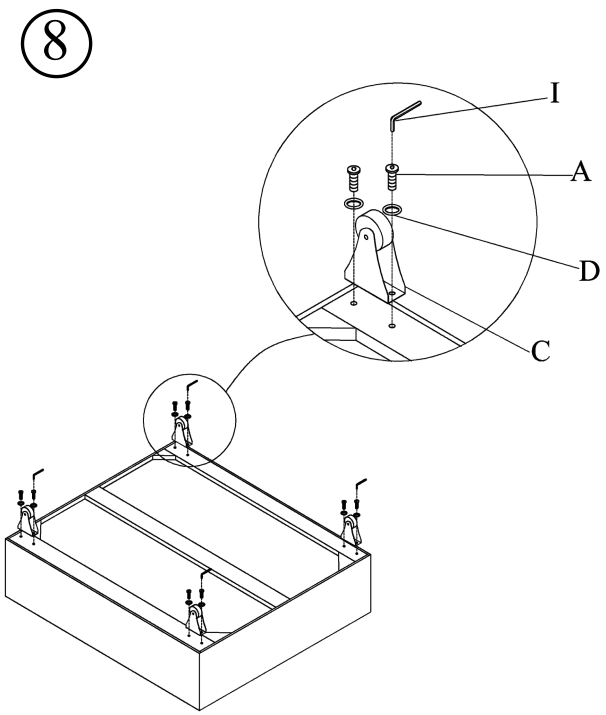

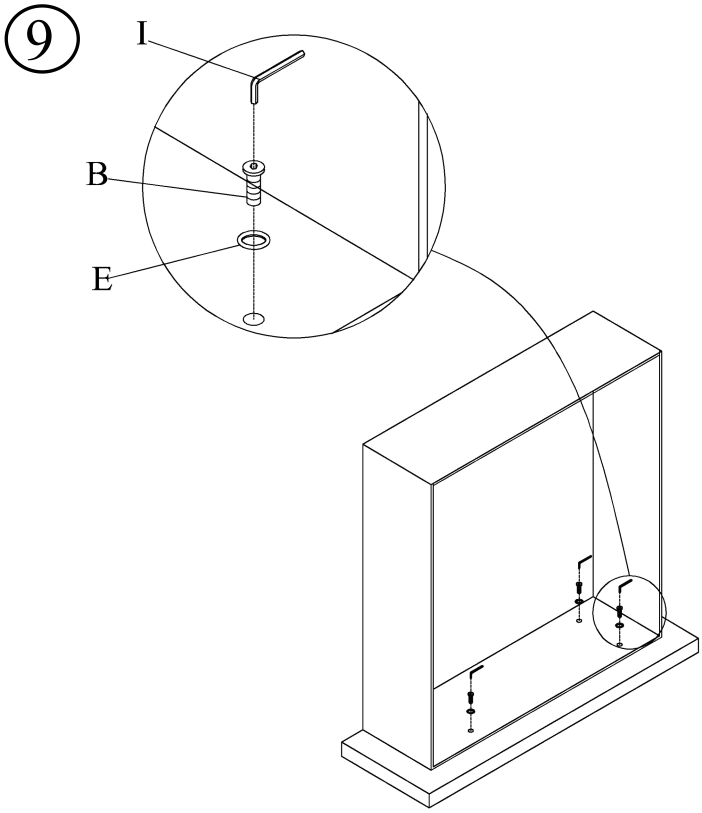

Step#8

Attach casters (C) to the drawer using Wrench (I), Bolt (A) and Washer (D).

Step#9

Attach drawers to the drawer face using Wrench (I), Bolt (B) and Washer (E)

CONGRATULATIONS ON YOUR NEW BED PURCHASE

~Warning：do not move bed after final assembly as it may result in damages to floor and/or bed.~

Dean Storage Twin Bed Assembly Instructions

⑩

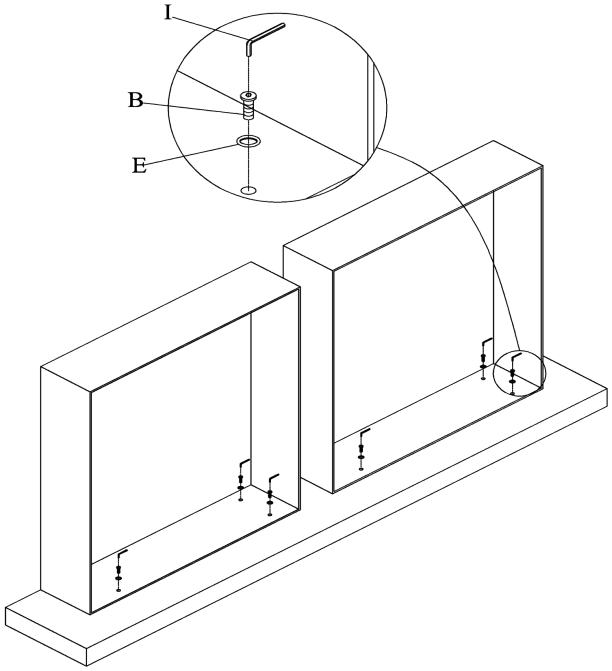

Step#10

Attach drawers to the footboard using Wrench (I), Bolt (B) and Washer (E).

⑪

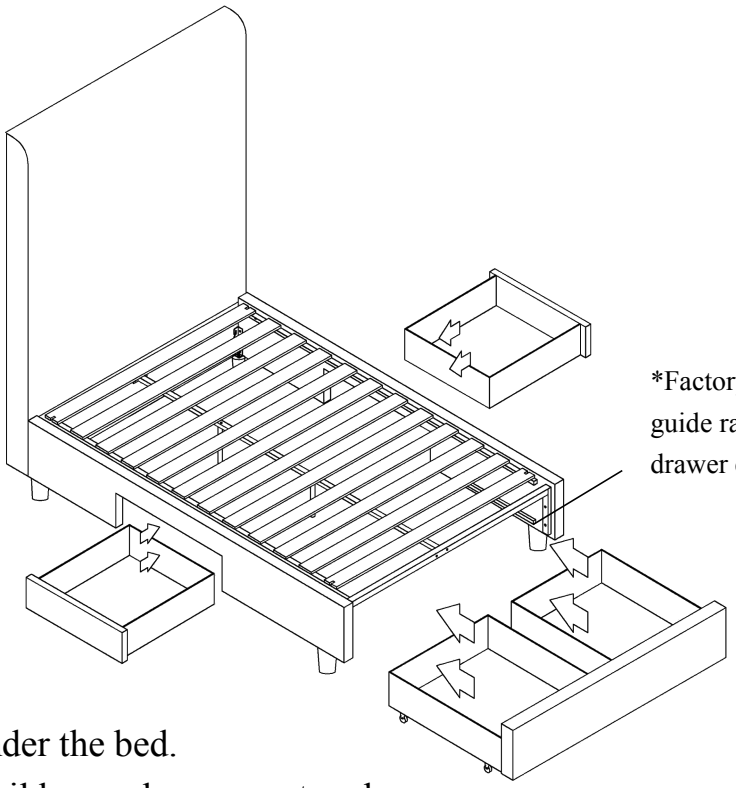

Step#11

Insert/Roll the drawer under the bed.

Factory installed guide rail keeps drawer centered.

CONGRATULATIONS ON YOUR NEW BED PURCHASE

~Warning：do not move bed after final assembly as it may result in damages to floor and/or bed.~