COASTER®
FINE FURNITURE

ASSEMBLY INSTRUCTIONS
COASTER FINE FURNITURE

Fine Furniture for every stage of life

801497
OFFICE CHAIR

REVISION 0:12/11/2018
REVISION 1:06/03/2019
REVISION 2:11/28/2019
REVISION 3:01/07/2020
REVISION 4:05/27/2021

COASTERFURNITURE.COM

ITEM :801497

ASSEMBLY INSTRUCTIONS

ASSEMBLY TIPS:

1.Remove hardware from box and sort by size.
2.Please check to see that all hardware and parts are present prior to start of assembly.
3.Please follow attached instructions in the same sequence as numbered to assure fast & easy assembly.

WARNING !

1.Don't attempt to repair or modify parts that are broken or defective. Please contact the store immediately.
2.This product is for home ues only and not intended for commercial establishments.

ASSEMBLY TIME | 20 MINUTES

PARTS IDENTIFICATION

A		BACK	1PC
B		SEAT	1PC
C		RIGHT ARMREST	1PC
D		LEFT ARMREST	1PC
E		MECHANISM	1PC
F		GAS LIFT	1PC
G		GAS LIFT COVER	1PC
H		BASE	1PC
I		CASTER	5PCS

HARDWARE IDENTIFICATION

1	LONG BOLT	M6*20	4PCS
2	SHORT BOLT	M6*25	8PCS
3	ALLEN WRENCH	M6	1PC
4	CAP		8PCS
5	WASHER	M6*18*1.2	4PCS

ITEM: 801497

ASSEMBLY INSTRUCTIONS

COASTER FINE FURNITURE

STEP1

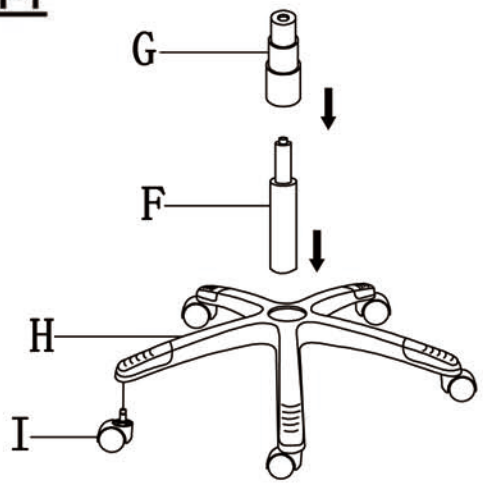

STEP2

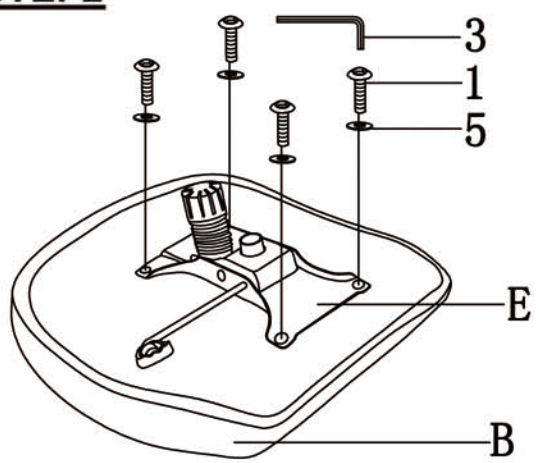

STEP3

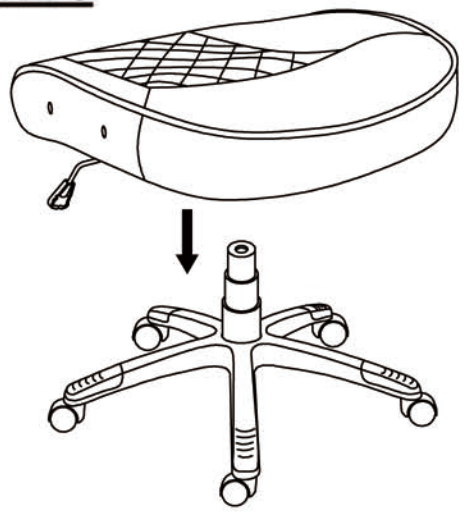

STEP4

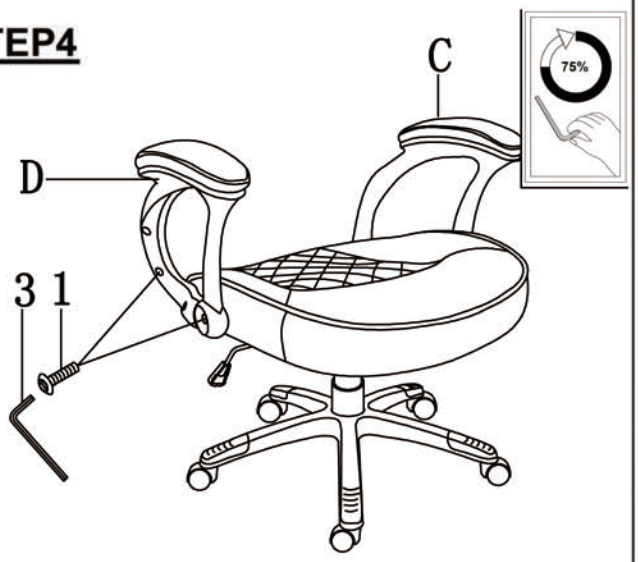

STEP5

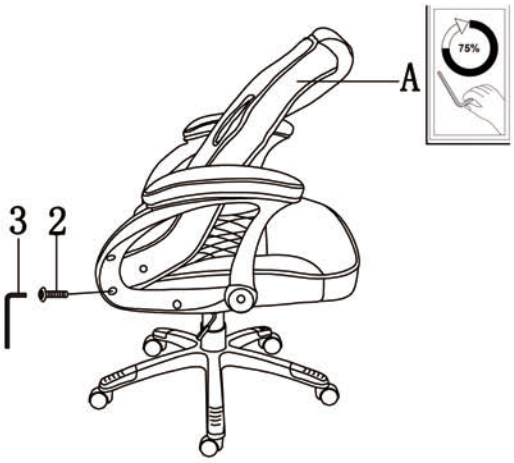

STEP6

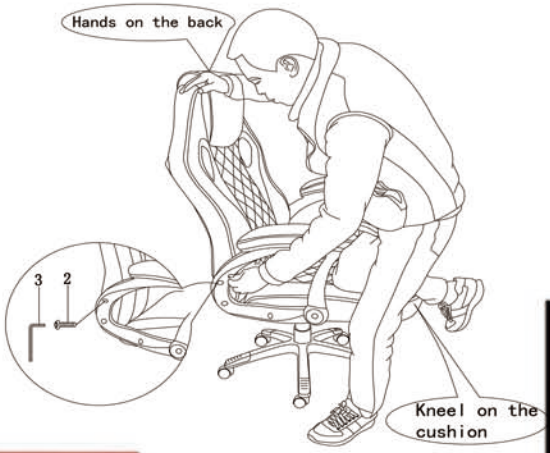

ITEM: 801497

ASSEMBLY INSTRUCTIONS

COASTER FINE FURNITURE

STEP7

STEP8

STEP9

ITEM: 801497

COASTER
FINE FURNITURE

Note : Dimension tolerance ±5%