AMARI

ASSEMBLY INSTRUCTIONS

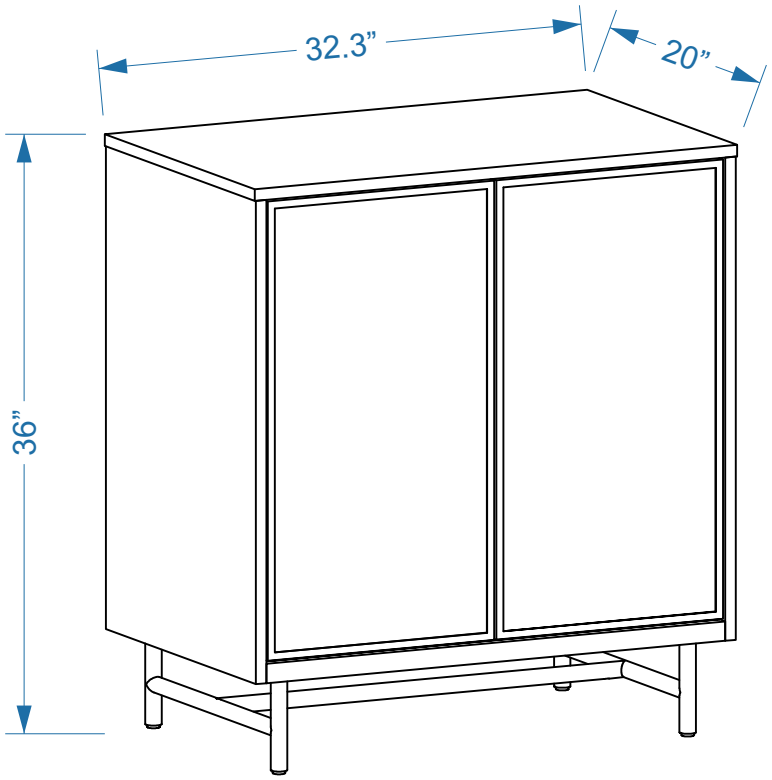

PARTS LIST

LABEL	PICTURE	DESCRIPTION	QTY
A	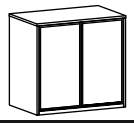	CHEST	1
B		LEG	2
C	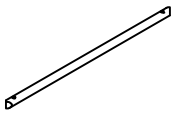	METAL BAR	1

HARDWARE

LABEL	PICTURE	DESCRIPTION	QTY
D		WASHER ∅16x∅6x2mm	6
E	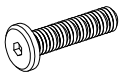	SCREW M6X20	6
F		SCREW M6X10	2
G		WRENCH M4X60	1

BEFORE BEGINNING ASSEMBLY:

Read instructions cover to cover

Have two adults on hand for assembly

Do NOT assemble on flooring or carpet. Assemble on a clean non-marring surface (ex: packing foam)

Save all packaging until assembly is completed

ASSEMBLY STEPS

STEP 1

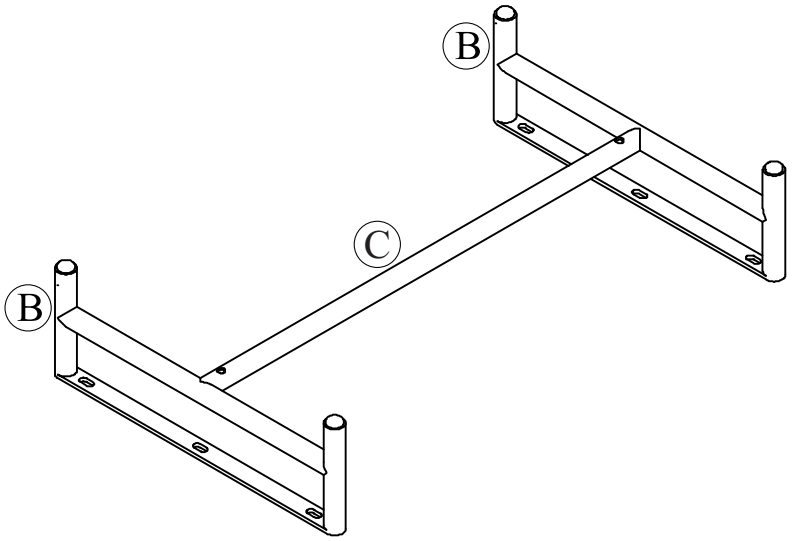

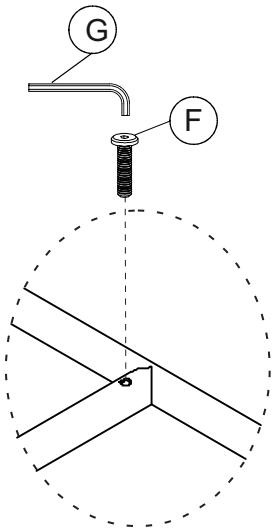

STEP 2

Adjust leveler if case of need

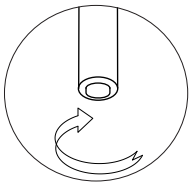

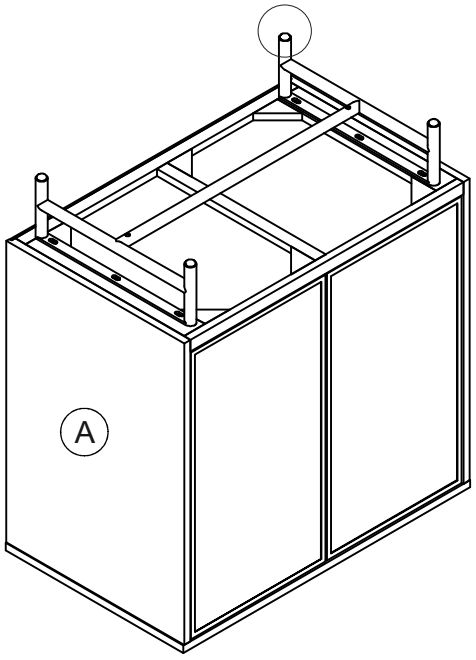

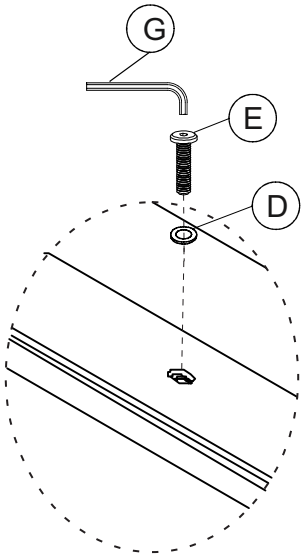

CARE & MAINTENANCE

Do not put hot items directy on furniture surface.

Do not clean furniture with harsh cleansers or polish

Dust and wipe up spills using a clean, non-colored,lint-free cloth.

Stains may be removed with mild soap solution and a damp cloth.

Do not place furniture under direct sunlight.

Do not place furniture near heating or cooling vents.

Do not write on furniture without a padded barrier to protect the surface.

Do not place furniture outside, for indoor use only.