LIVING SPACES

A	KFB11031-A		X1
B	KFB11031-B		X4
C	KFB11031-C		X8
D	KFB11031-D		X8
E	KFB11031-E		X1

KFB11031 SKU#288339
CABINET

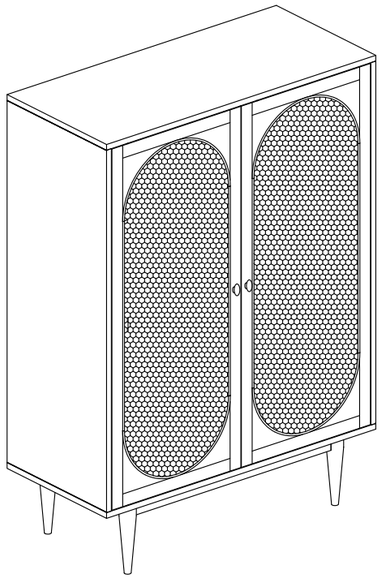

X2

0:15
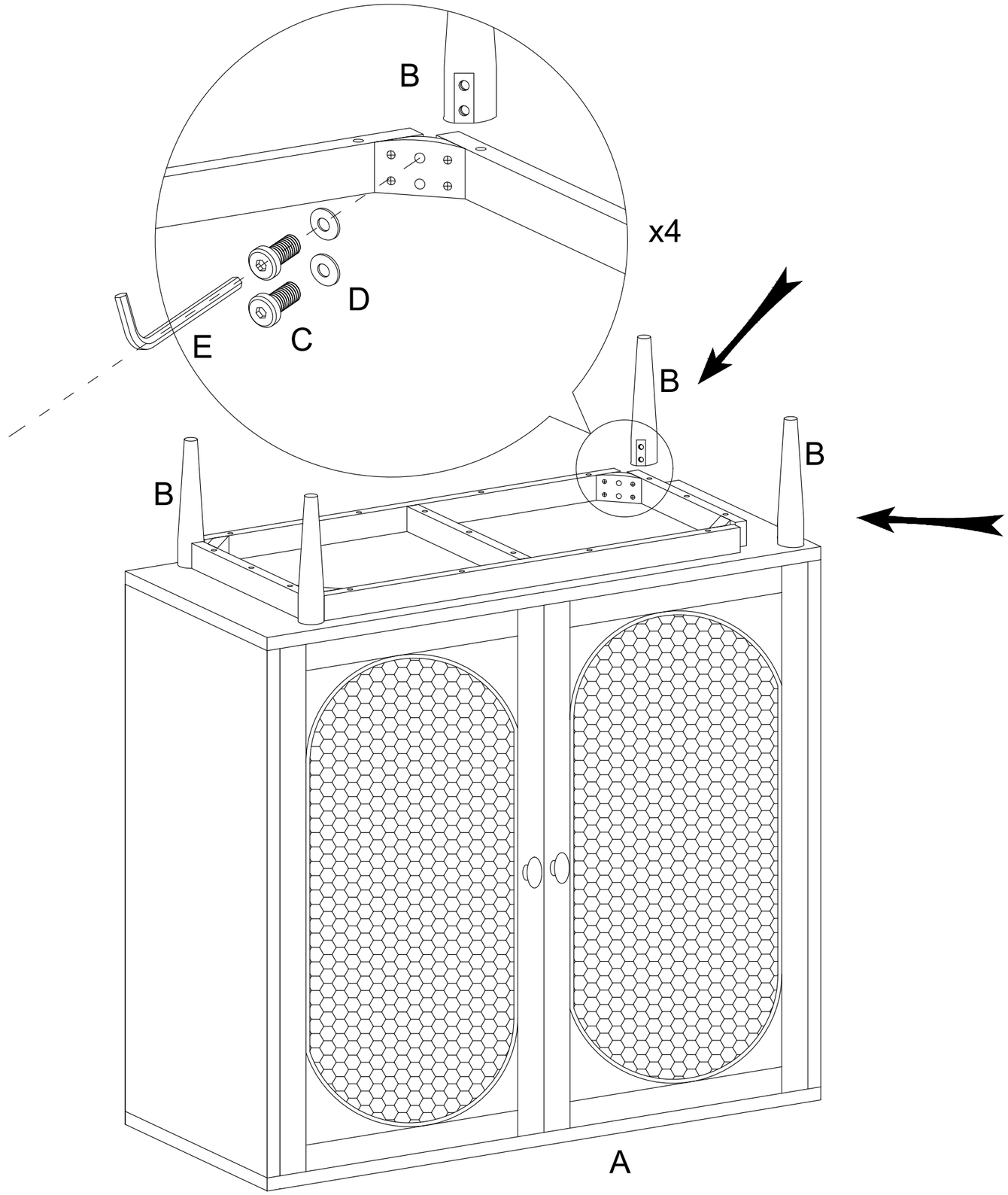
1