LIVING SPACES

HOLLIS WRITING DESK

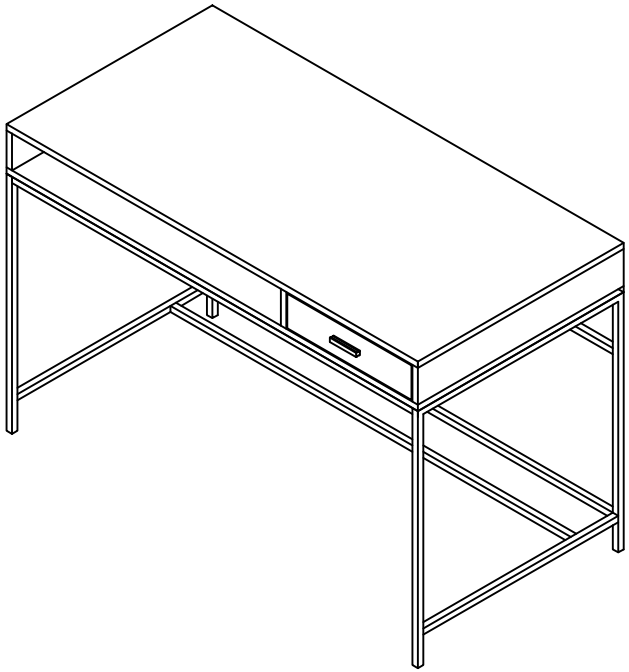

SD1612-168
HOLLIS WRITING DESK

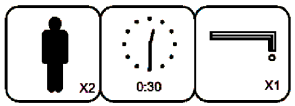

A	SD1612-168-A	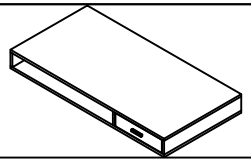	x1
B	SD1612-168-B	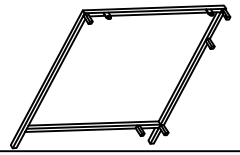	x1
C	SD1612-168-C	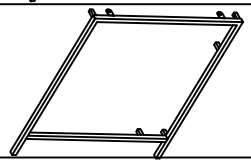	x1
D	SD1612-168-D	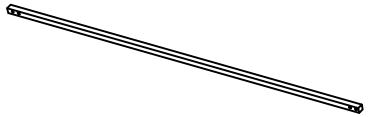	x3
E	SD1612-168-E	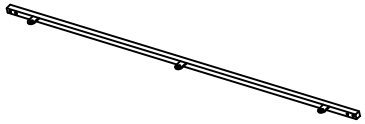	x2
F	SD1612-168-F	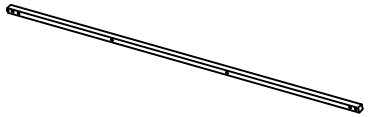	x1
G	SD1612-168-G	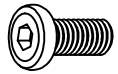	x34
H	SD1612-168-H	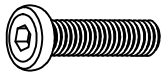	x2
I	SD1612-168-I		x10

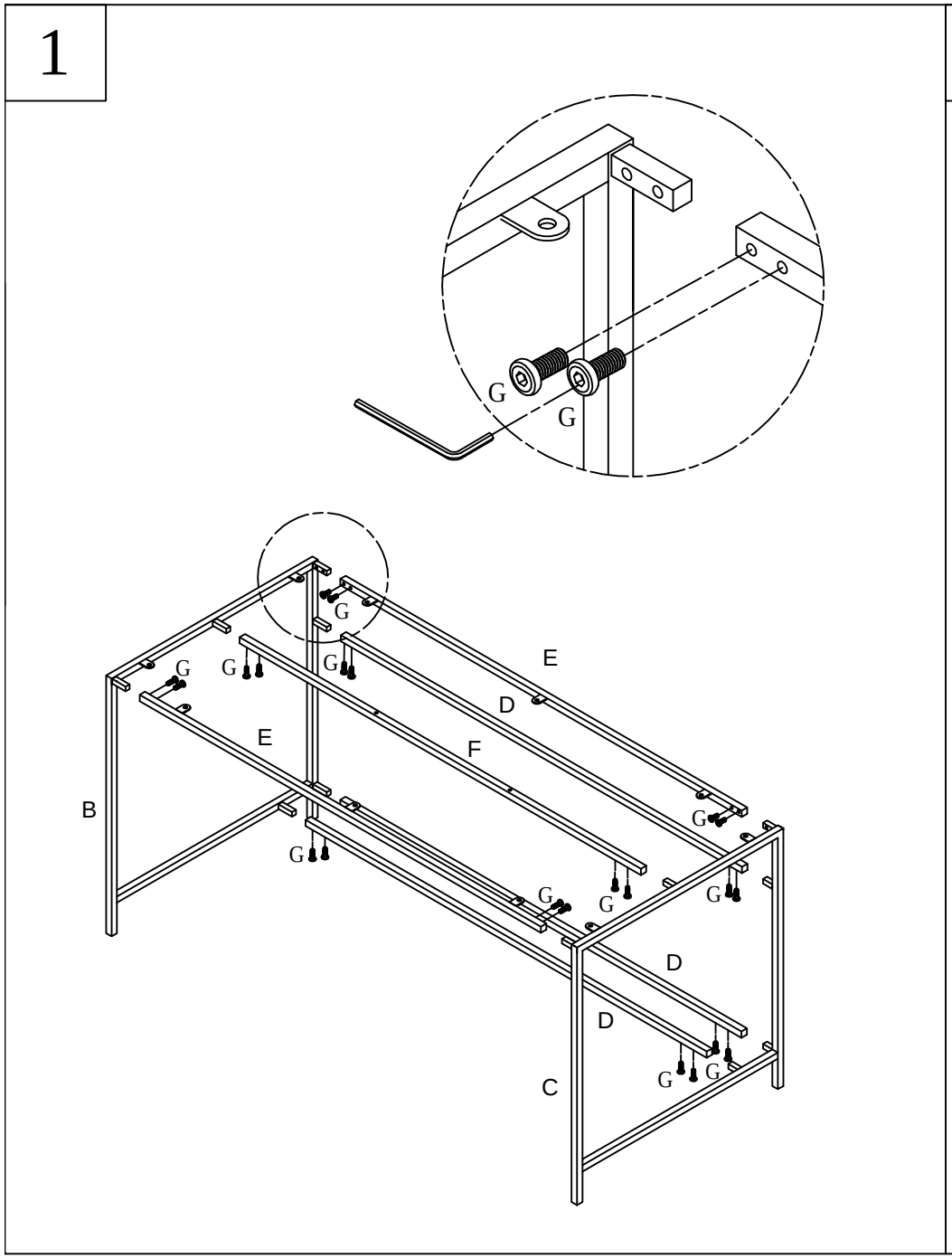
1
G
G
G
G
G
G
G
E
D
E
F
B
G
G
G
G
G
D
D
C
G
G

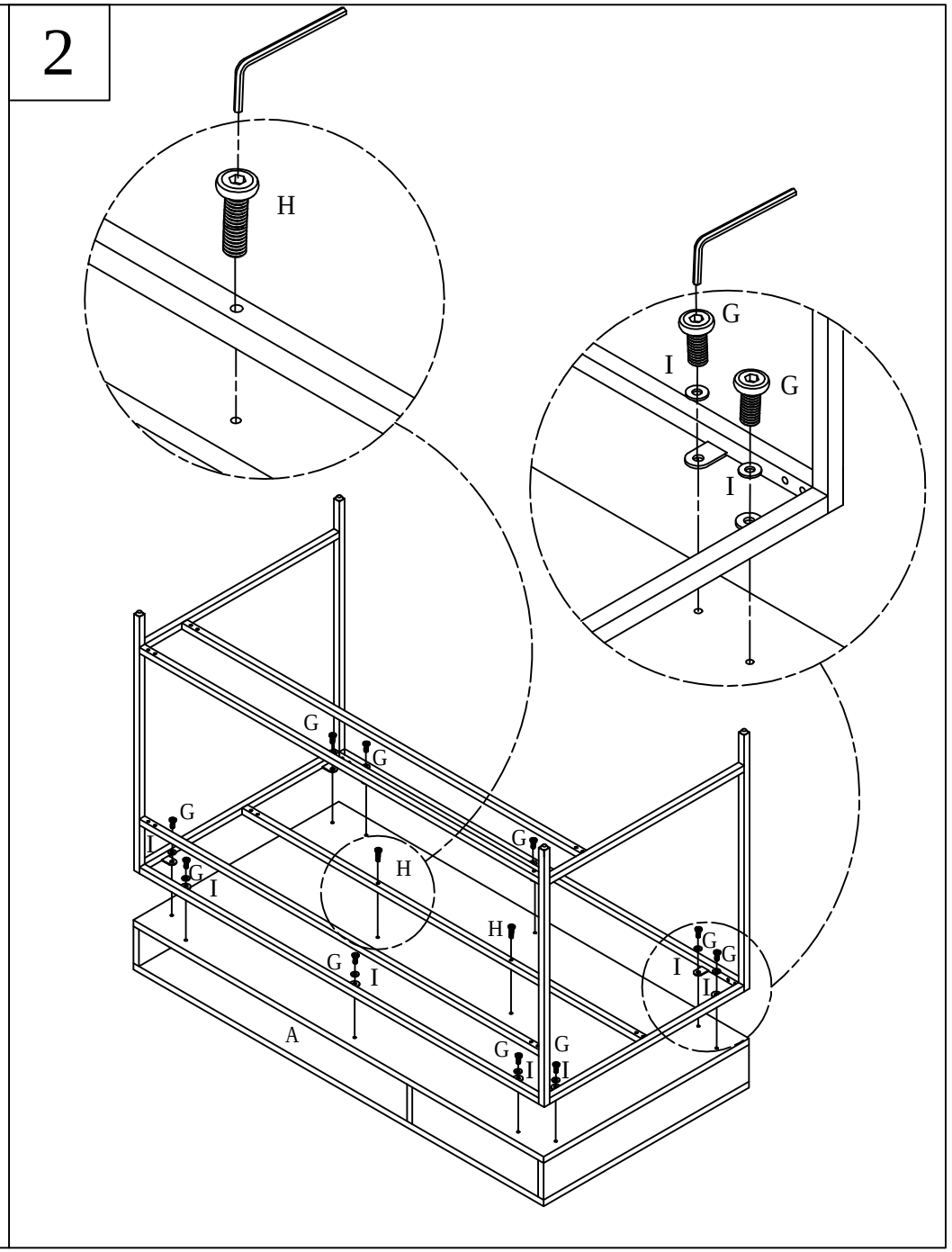
2
H
G
I
G
I
G
G
G
I
G
I
H
G
H
G
I
G
G
I
I
A
G
G
I
I

LIVING SPACES

HOLLIS 17 INCH WIDE CABINET PIER

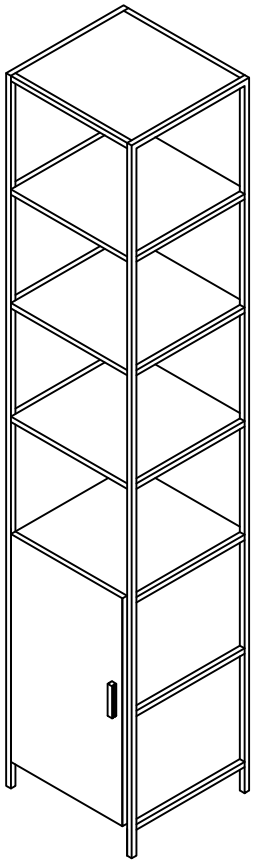

SD1612-164
HOLLIS 17 INCH WIDE CABINET PIER

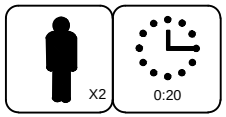

PART LIST

A	SD1612-164-A	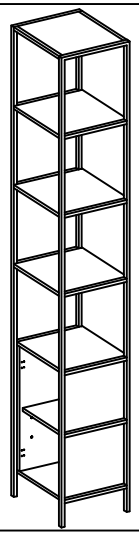 x1
B	SD1612-164-B	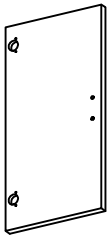 x1
C	SD1612-164-C	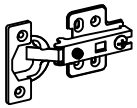 x2
D	SD1612-164-D	x12

1

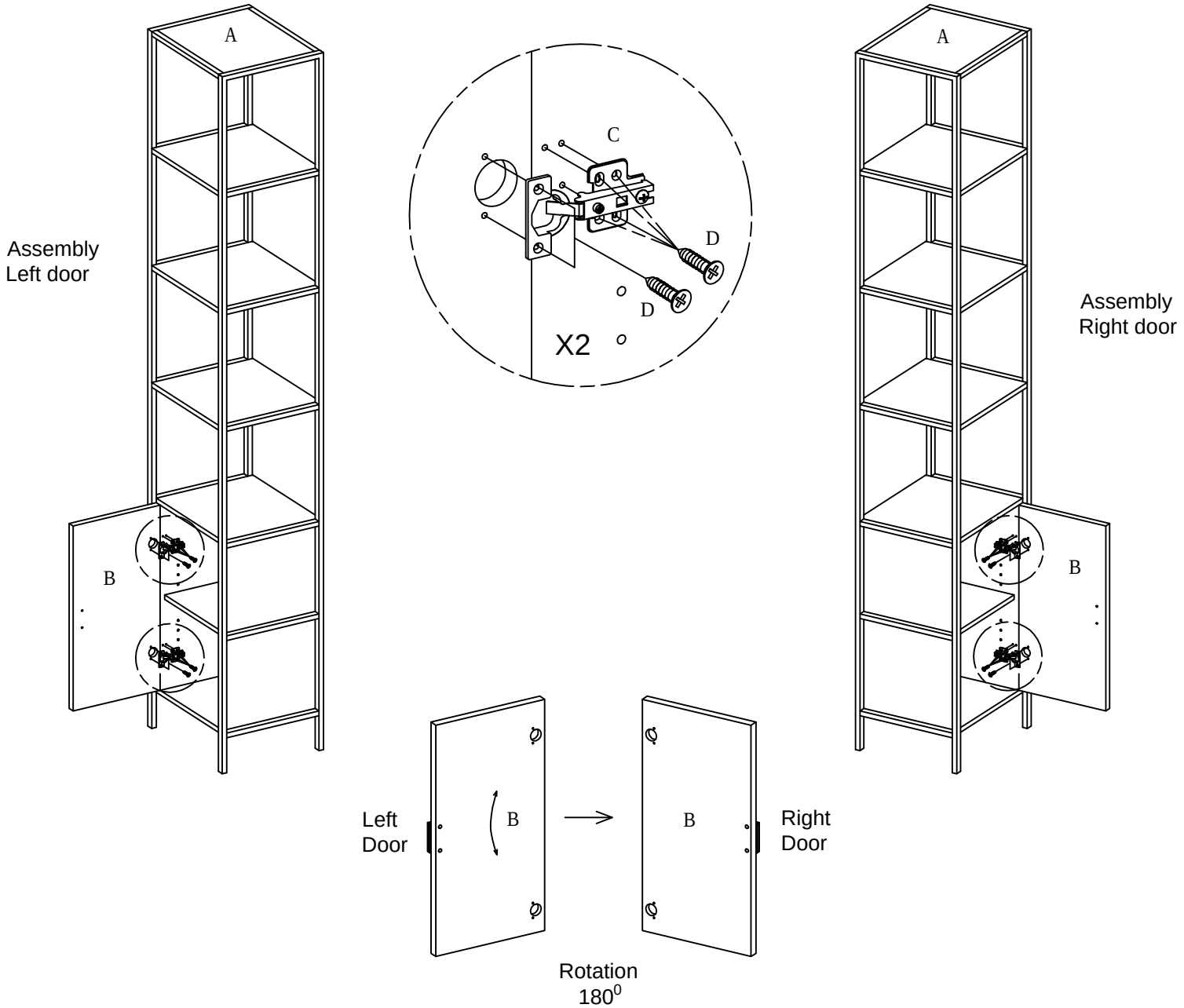
A
Assembly
Left door
B
C
D
D
X2
A
Assembly
Right door
B
Left
Door
B
B
Right
Door
Rotation
180^0

2

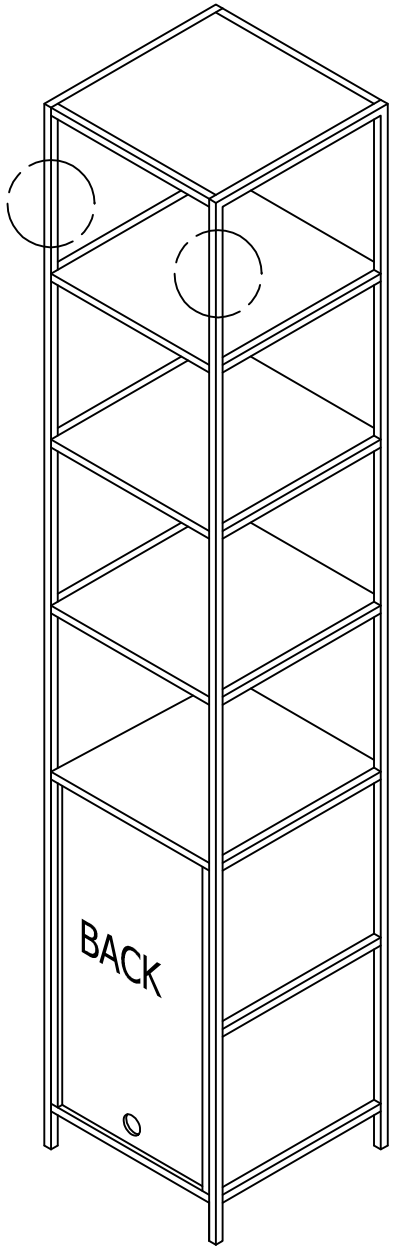

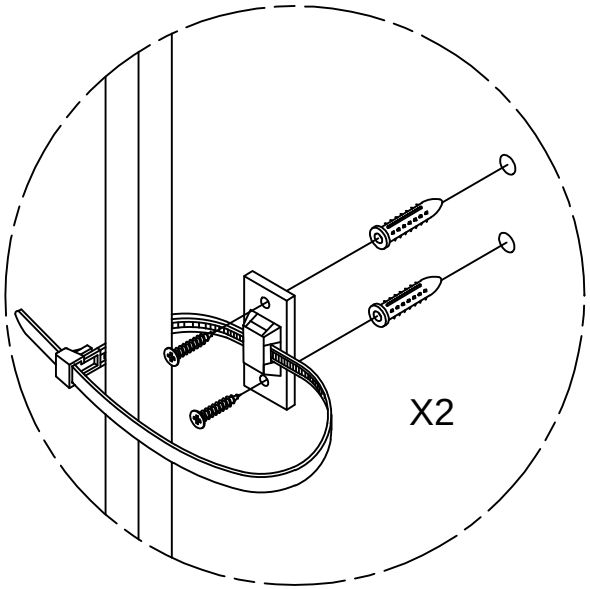

Anti-tip kit Hardware Illustration

x 4	x 4	x 2	x 2
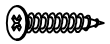 Screw Ø4 x 35m/mL	Plastic wall screw	Bracket	Strap