aspenhome®

Distributed by Furniture Values International, LLC

ASSEMBLY INSTRUCTIONS

ITEM NO:	I07-412-WBR/PEP/BLK	Queen Panel HB
	I07-400-WBR/PEP/BLK	Queen Sleigh HB
	I07-402-WBR/PEP/BLK	Queen Rails
	I07-403-WBR/PEP/BLK	Queen Low Profile FB

Thank you for purchasing this quality product. Be sure to check all packing material carefully for small parts that may come loose inside the carton during shipment.

⚠ UNIT SHOULD BE INSTALLED BY 2 OR MORE PERSONS.

OPTION 1: Queen LP Panel Bed

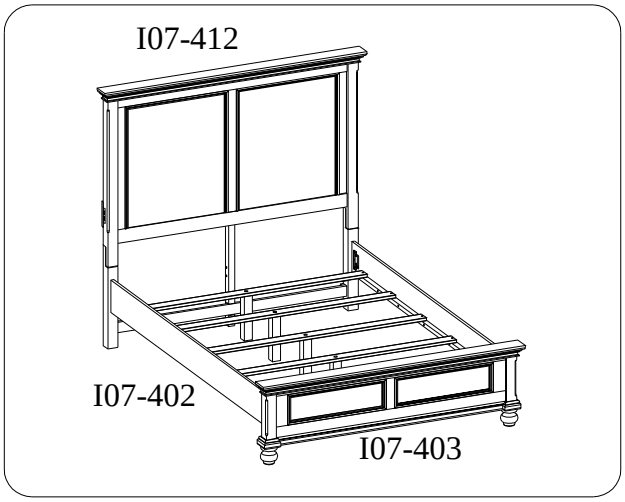

All Beds need to be set up in the exact final location so that after full assembly it will not need to be moved. Moving the bed will cause the support legs to move out of perpendicular (90 degree), weaken the support system, and may allow the bed to collapse.

OPTION 2: Queen LP Sleigh Bed

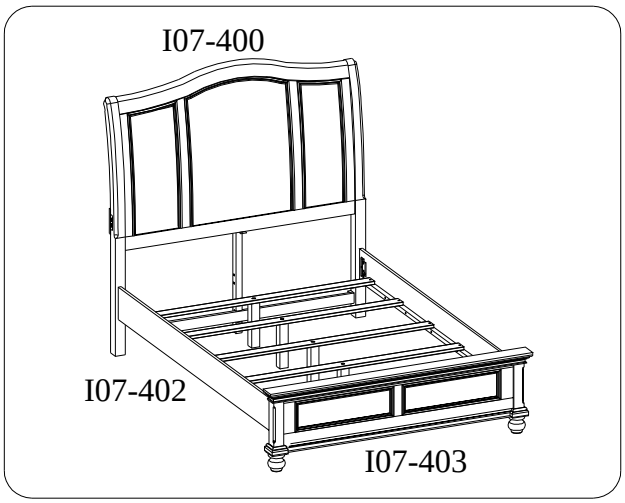

BEFORE USING THIS PRODUCT PLEASE READ, UNDERSTAND, AND FOLLOW THESE INSTRUCTIONS.
Save these instructions for future reference.

FOR INDOOR USE ONLY

MADE IN VIETNAM

aspenhome®

Distributed by Furniture Values International, LLC

ASSEMBLY INSTRUCTIONS

ITEM NO: I07-412-WBR/PEP/BLK Queen Panel HB
I07-400-WBR/PEP/BLK Queen Sleigh HB
I07-402-WBR/PEP/BLK Queen Rails
I07-403-WBR/PEP/BLK Queen Low Profile FB

TOOLS REQUIRED (NOT PROVIDED)
PHILLIPS SCREWDRIVER

HARDWARE LIST: I07-412

No.	Description	Sketch	Quantity
A	Bolt Ø5/16"*2"		6 PCS
B	Bolt Ø5/16"*1-9/16"		3 PCS
C	Bolt Ø5/16"*1-3/8"		4 PCS
D	Lock Washer Ø5/16"		13 PCS
E	Flat Washer Ø5/16" *3/4"		13 PCS
F	Allen Wrench 5mm		1 PC

HARDWARE LIST: I07-400

No.	Description	Sketch	Quantity
G	Wood Dowel Ø3/8"*1-9/16"		8 PCS
H	Bolt Ø5/16"*1-9/16"		9 PCS
I	Bolt Ø5/16"*1-3/8"		4 PCS
J	Lock Washer Ø5/16"		13 PCS
K	Flat Washer Ø5/16" *3/4"		13 PCS
L	Allen Wrench 5mm		1 PC

HARDWARE LIST: I07-402

No.	Description	Sketch	Quantity
M	Wood Screw M4*1-3/16"		8 PCS
N	Hanger Bolt Ø5/16"*3-1/16"		8 PCS
O	Lock Washer Ø5/16"		8 PCS
P	Flat washer 5/16" x 5/8"		8 PCS
Q	Hex Nut Ø5/16"		8 PCS
R	Hex Wrench 90*25*2mm		1 PC

COMPONENTS LIST: I07-412

No.	Description	Sketch	Quantity
1	Headboard		1 PC
2	Left Leg		1 PC
3	Right Leg		1 PC
4	Wood Stretcher		1 PC
5	Center Support Leg		1 PC

COMPONENTS LIST: I07-400

No.	Description	Sketch	Quantity
1	Headboard		1 PC
2	Left Leg		1 PC
3	Right Leg		1 PC
4	Wood Stretcher		1 PC
5	Center Support Leg		1 PC

COMPONENTS LIST: I07-402

No.	Description	Sketch	Quantity
1	Bed rails		2 PC
2	Slats		4 PC

COMPONENTS LIST: I07-403

No.	Description	Sketch	Quantity
1	Footboard		1 PC
2	Support leg (for slats)		4 PCS
3	Bun foot		2 PCS

MADE IN VIETNAM

aspenhome®

Distributed by Furniture Values International, LLC

ASSEMBLY INSTRUCTIONS

ITEM NO: I07-412-WBR/PEP/BLK	Queen Panel HB
I07-400-WBR/PEP/BLK	Queen Sleigh HB
I07-402-WBR/PEP/BLK	Queen Rails
I07-403-WBR/PEP/BLK	Queen Low Profile FB

OPTION 1: Queen LP Panel Bed

STEP 1: Put the headboard face down on a soft surface. Attach the left leg and right leg to headboard by using 6 bolts(A), lock washers(D) and flat washers(E).

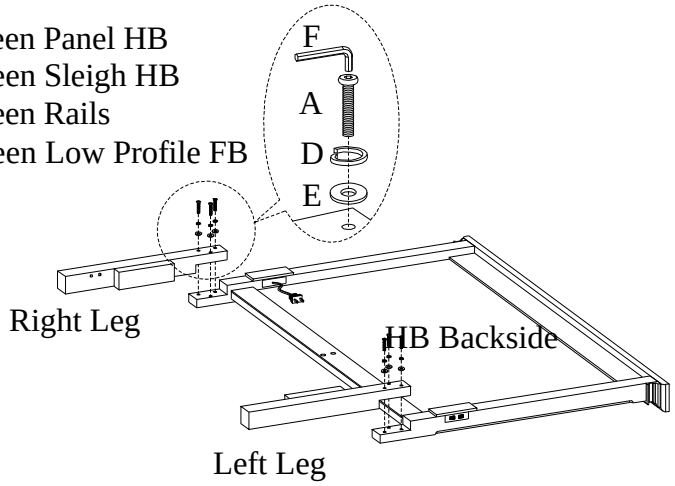

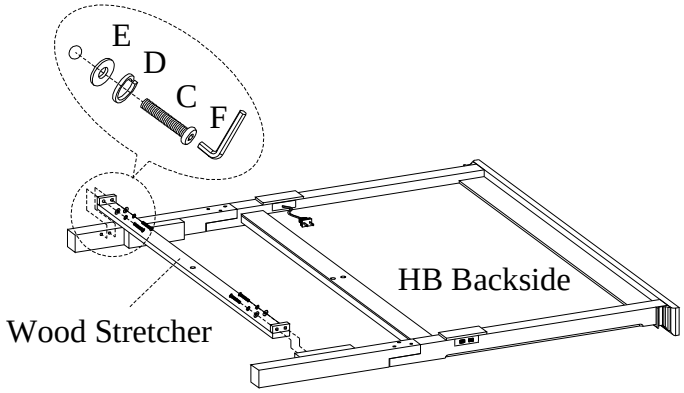

STEP 2: Attach the wood stretcher to the legs by using 4 bolts(C), lock washers(D) and flat washers(E).

STEP 3: Attach the center support leg to headboard and wood stretcher by using 3 bolts(B), lock washers(D) and flat washers(E).

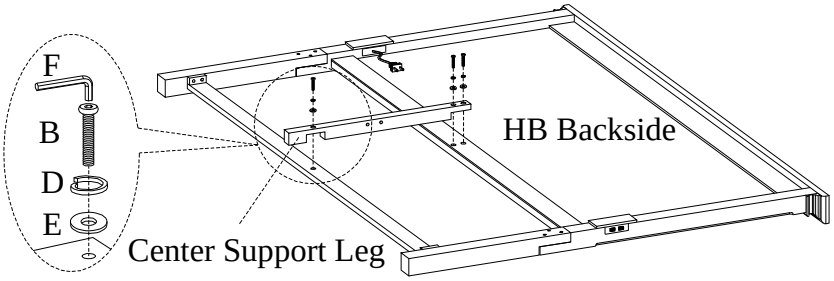

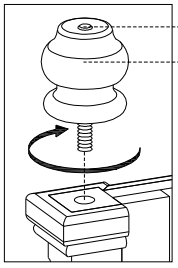

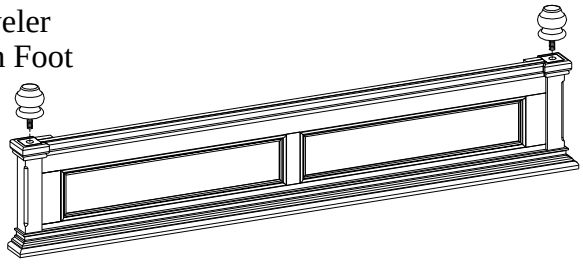

STEP 4: Put footboard upside down on a padded, clean surface. Attach bun feet to footboard. Turn footboard right side up.

STEP 5: The side rails may be used on either side. Arrange the side rails so the slat bearers are in LOWER POSITION prior to attachment in STEP 6.

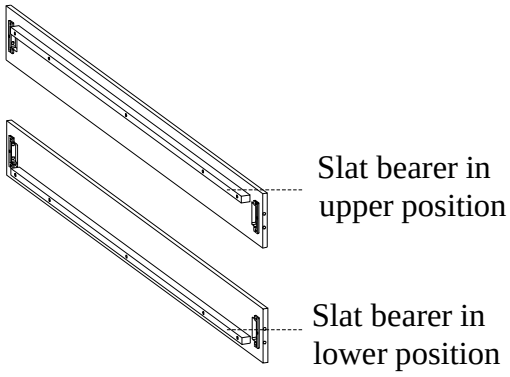

MADE IN VIETNAM

ITEM NO:	I07-412-WBR/PEP/BLK	Queen Panel HB
	I07-400-WBR/PEP/BLK	Queen Sleigh HB
	I07-402-WBR/PEP/BLK	Queen Rails
	I07-403-WBR/PEP/BLK	Queen Low Profile FB

STEP 6: Screw the bolts(N) into HB & FB. Align the bolts with the holes in the end of side rails and attach the side rails to HB & FB using flat washer(P), lock washers(O) and nuts(Q).Then use a hex wrench(R) to tighten all the nuts.

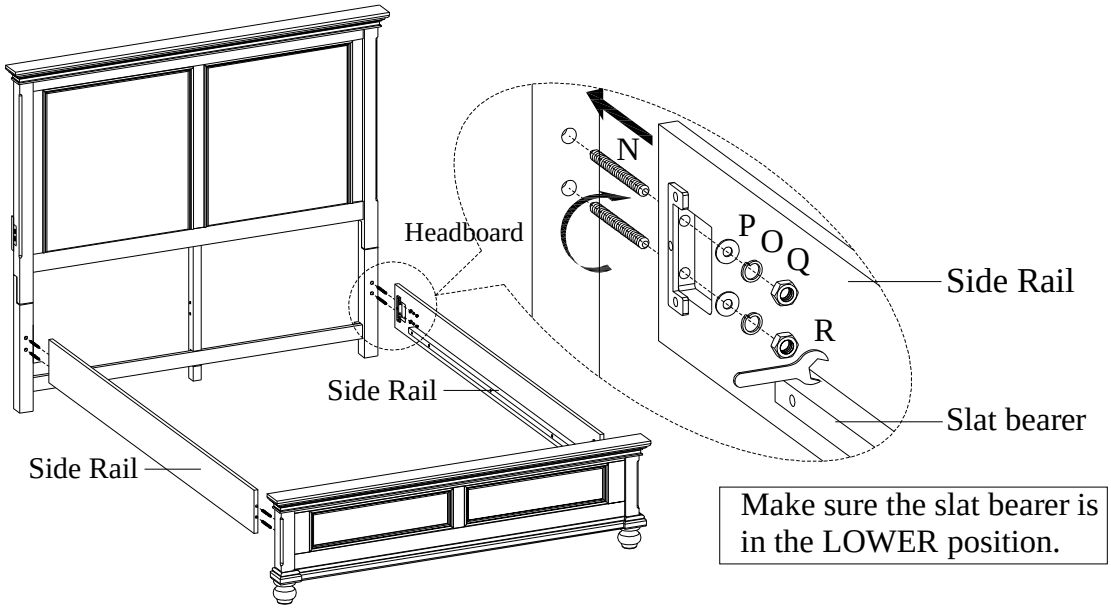

Make sure the slat bearer is in the LOWER position.

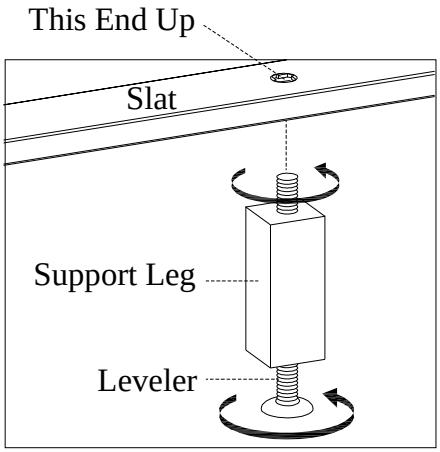

STEP 7: Attach the support legs with leveler to the slats. Adjust the levelers on bottom of support legs when necessary.

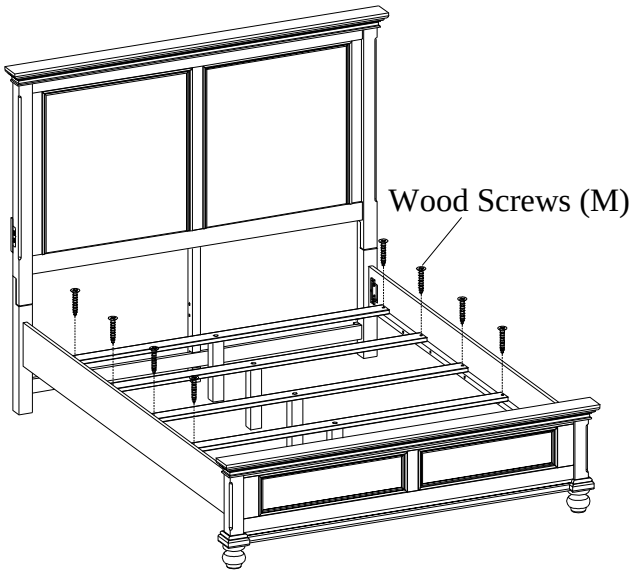

STEP 8: Arrange the slats on the slat bearer equally and attach to the slat bearer with wood screws (M).

ITEM NO:	I07-412-WBR/PEP/BLK	Queen Panel HB
	I07-400-WBR/PEP/BLK	Queen Sleigh HB
	I07-402-WBR/PEP/BLK	Queen Rails
	I07-403-WBR/PEP/BLK	Queen Low Profile FB

OPTION 2: Queen LP Sleigh Bed

STEP 1: Put the headboard face down on a soft surface. Insert 8 wood dowels (G) into headboard, Then attach the left leg and right leg to headboard by using 6 bolts(H), lock washers(J) and flat washers(K).

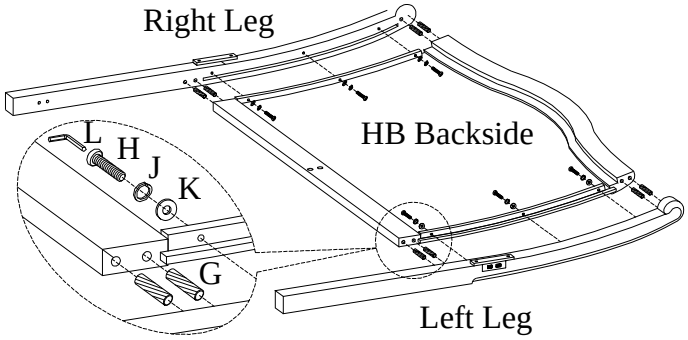

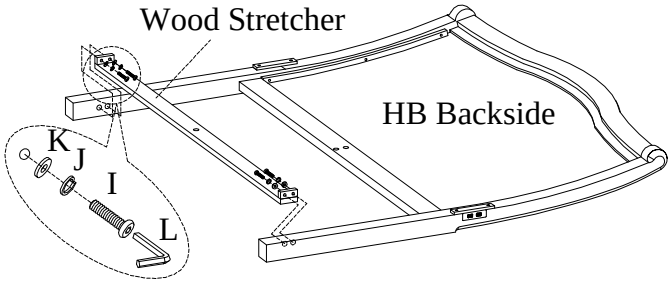

STEP 2: Attach the wood stretcher to the legs by using 4 bolts(I), lock washers(J) and flat washers(K).

STEP 3: Attach the center support leg to headboard and wood stretcher by using 3 bolts(H), lock washers(J) and flat washers(K).

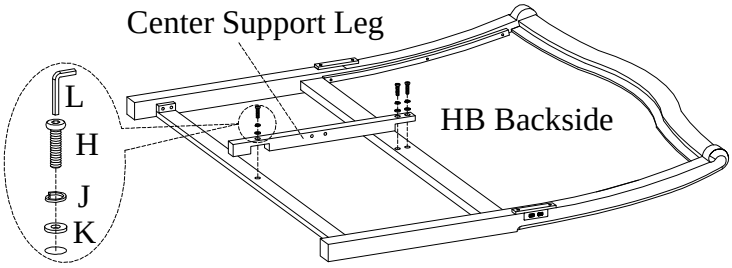

STEP 4 to STEP 11 are same as OPTION 1

aspenhome®

Distributed by Furniture Values International, LLC

ASSEMBLY INSTRUCTIONS

ITEM NO:	I07-412-WBR/PEP/BLK	Queen Panel HB
	I07-400-WBR/PEP/BLK	Queen Sleigh HB
	I07-402-WBR/PEP/BLK	Queen Rails
	I07-403-WBR/PEP/BLK	Queen Low Profile FB

FUNCTIONALITY INSTRUCTION

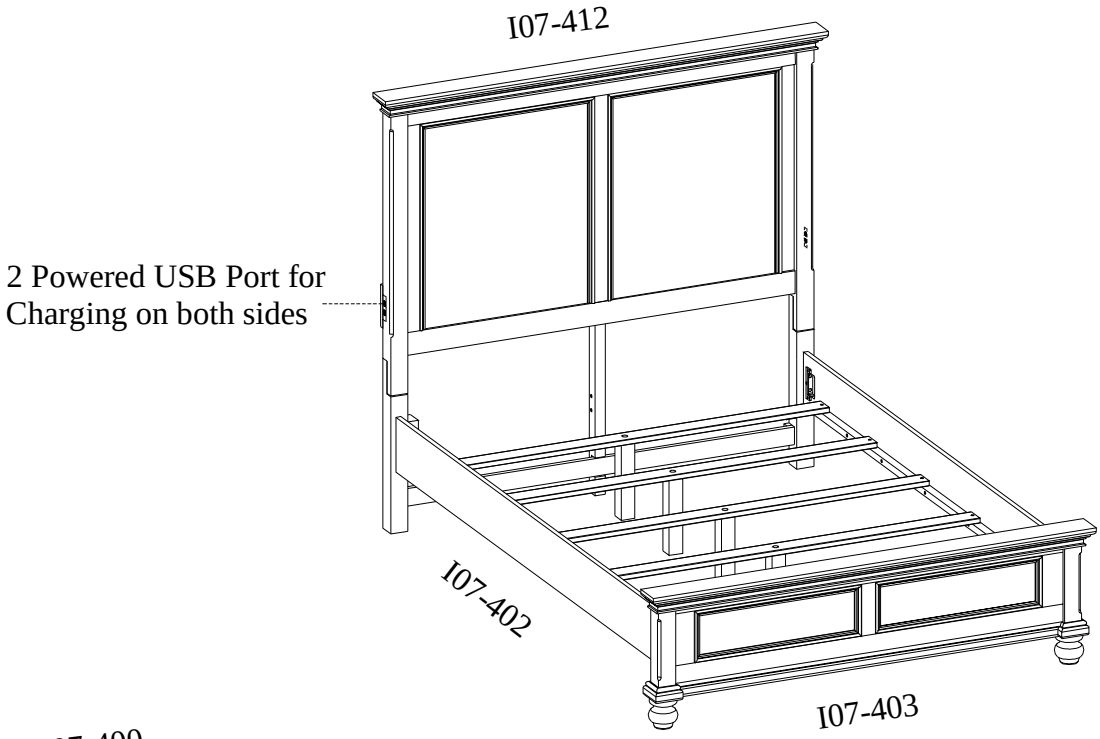

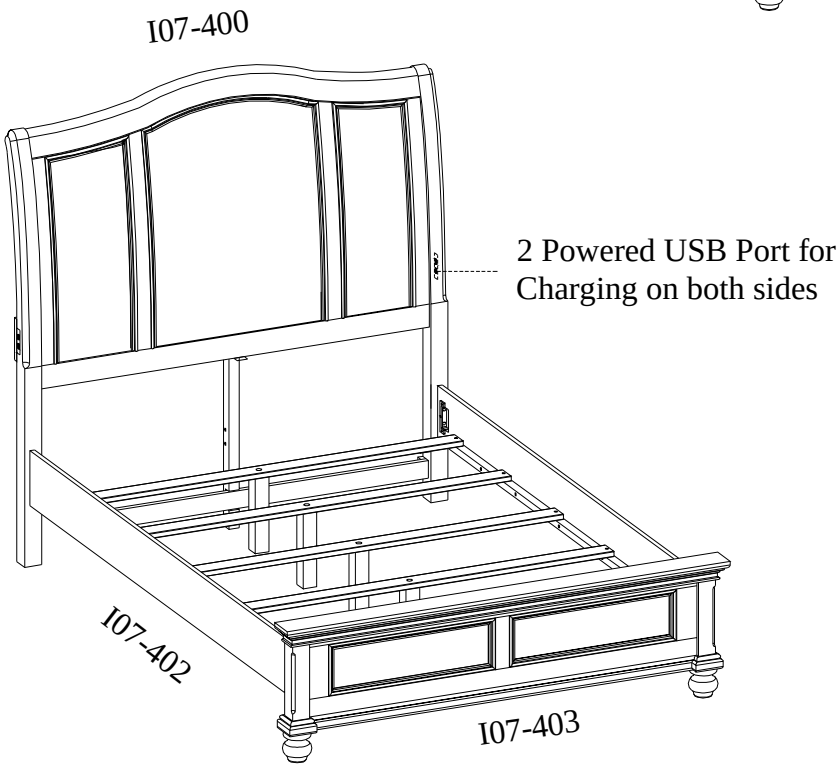

MADE IN VIETNAM