SANIBEL OUTDOOR END TABLE
19CT039-6060A
Assembly Instruction

Parts List:

REF	PART NAME	PART IMAGE	QTY	REF	PART NAME	PART IMAGE	QTY
A	DESKTOP	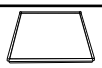	1	F	METAL WASHER		16
B	CLAPBOARD		1	G	BOLT (M6*55)	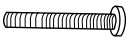	8
C	TABLE LEG		4	H	BOLT (M6*50)	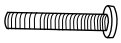	4
D	SIDE BAFFLE	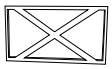	2	I	BOLT (M6*35)		4
E	ALLEN WRENCH		2	J	PLASTIC BOLT CAP		16

Diagram:

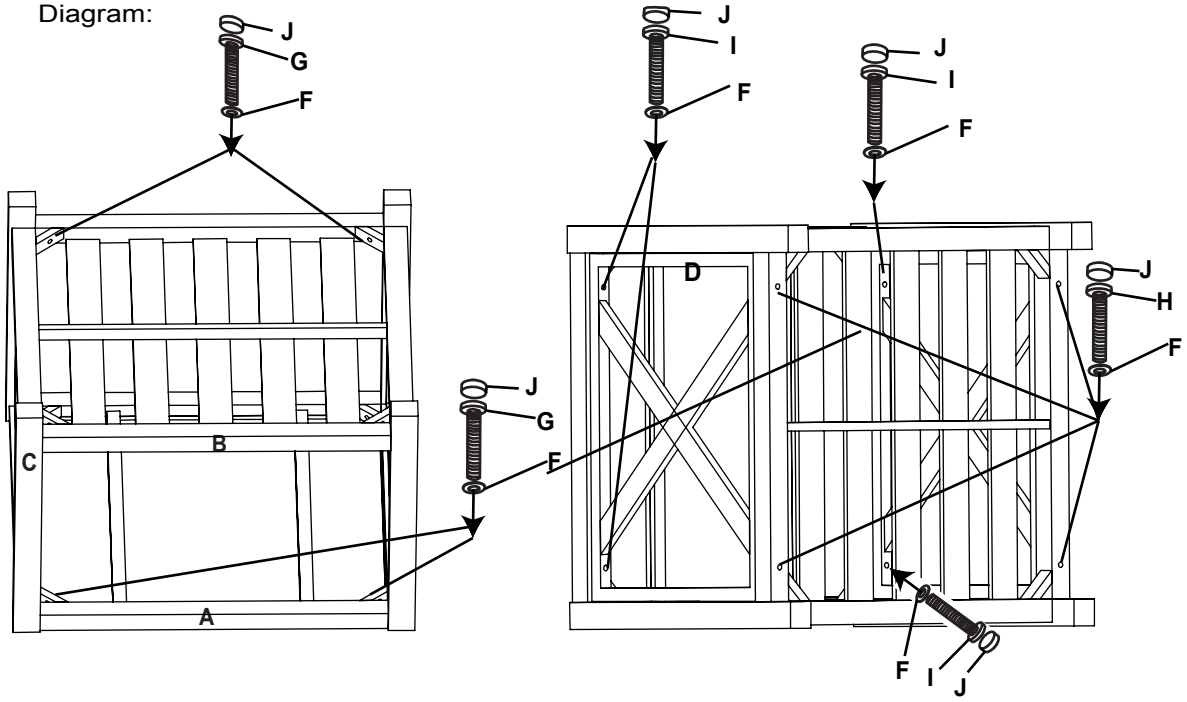

Assembly Steps:

Step 1: Remove protective wrapping and lay all parts on floor. Indentify all parts packed in Carton against attached parts list to make sure all parts are presented.

Step 2: Tip-Do not fully tighten the bolts until the components are fully assembled.

Step 3: Take out the table foot (C) and align it with the screw hole of the table top (A), use the washer (F) screw as shown in the figure (G) and PE cover (J).

Step 4: Pour the product on the ground, align the partition (B) with the lower hole of the table leg (C), as shown in the figure use washers (F) and screws (G) on the PE cover (J).

Step 5: Place the product sideways, and then take out the side baffle(D). Use washers (F). screw (H). PE cover (J) to align the bottom hole position of the side baffle with clapboard(B), and use washers (F). screw (I). PE cover (J) to align the upper hole position of the side baffle with desktop(A).

Note: The user is responsible for ensuring that all parts are assembled and
Tighten correctly and safely.