LIVING SPACES

OWNER'S MANUAL

JAXON GREY UPHOLSTERED HIGH BACK BENCH
LIVING SPACES SKU : 202290
VENDOR ITEM NO. : 7YU669

Scan QR code to view assembly video

ASSEMBLY PARTS LIST

SKU #	IMAGE	DESCRIPTION	QUANTITY
202290-1		BACK	1
202290-2		SEAT	1
7YU669LL		LEFT LEG	1
7YU669LR		RIGHT LEG	1
7YU669LM		MIDDLE LEG	1
7YU669SL		LEFT STRETCHER	1
7YU669SR		RIGHT STRETCHER	1
7YU669LS		LONG STRETCHER	1
7YU669SM		MIDDLE STRETCHER	1

HARDWARE KIT PACKED IN BOX
SKU : 7YZZ69HW

SKU #	IMAGE	DESCRIPTION	QUANTITY
7YZZ69HW-1		ALLEN BOLT (M6 X 40MM)	2
7YZZ69HW-2		ALLEN BOLT (M6 X 50MM)	6
7YZZ69HW-3		ALLEN BOLT (M6 X 70MM)	4
7YZZ69HW-4		LOCK WASHER (M6)	12
7YZZ69HW-5		FLAT WASHER (M6)	12
7YZZ69HW-6		WOOD SCREW (M4X30MM)	1
7YZZ69HW-7		WOOD SCREW (M4X40MM)	8
7YZZ69HW-8		ALLEN KEY	1

FULLY ASSEMBLED

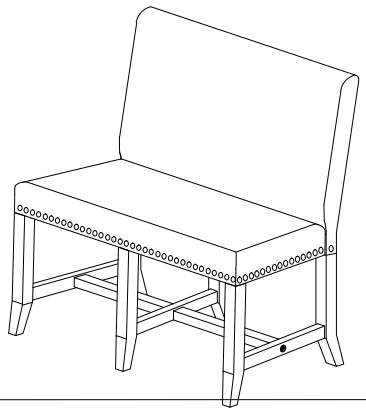

PRE-ASSEMBLED PARTS LIST

SKU #	IMAGE	DESCRIPTION	SKU #	IMAGE	DESCRIPTION
7YZZCPFC18		FOOT CAP	7YZZCPBTS		SMALL DECORATIVE NUT & BOLT

LIVING SPACES

OWNER'S MANUAL

JAXON GREY UPHOLSTERED HIGH BACK BENCH
LIVING SPACES SKU : 202290
VENDOR ITEM NO. : 7YU669

Scan QR code to view assembly video

ASSEMBLY INSTRUCTIONS

1

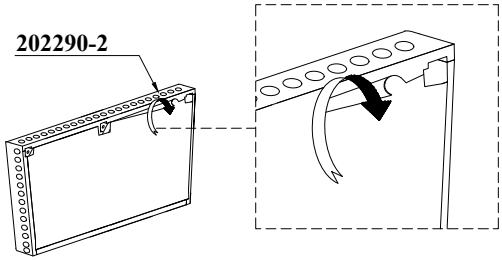

2

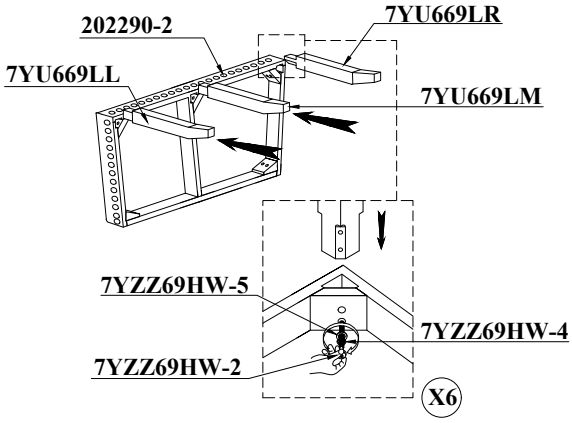

3

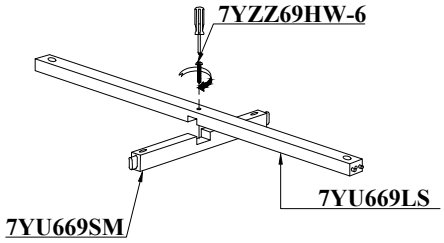

4

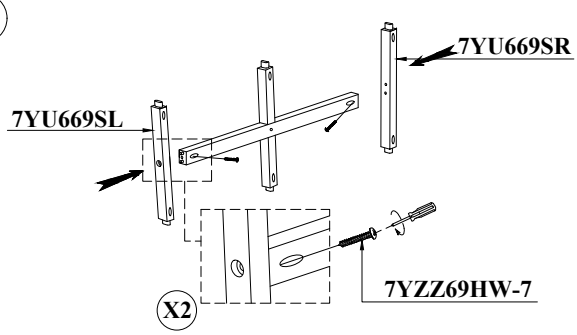

5

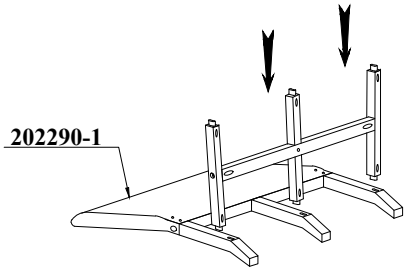

6

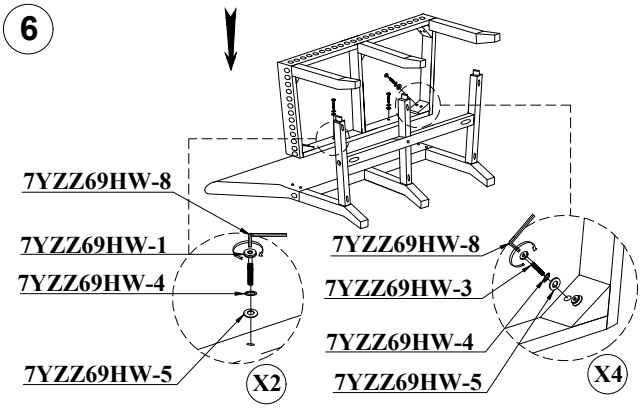

NOTE: FULLY TIGHTEN ALL ALLEN BOLTS FROM THIS AND PREVIOUS STEPS.

LIVING SPACES

OWNER'S MANUAL

JAXON GREY UPHOLSTERED HIGH BACK BENCH
LIVING SPACES SKU : 202290
VENDOR ITEM NO. : 7YU669

Scan QR code to view assembly video

ASSEMBLY INSTRUCTIONS

7

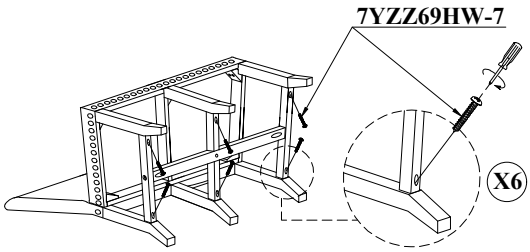

8

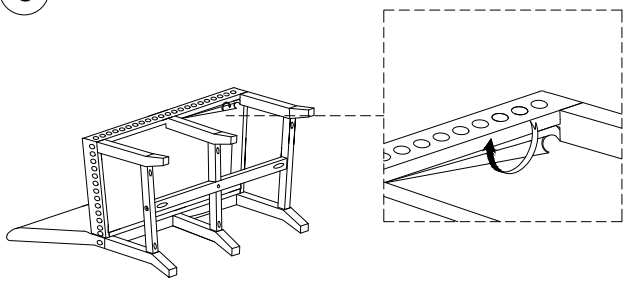

9

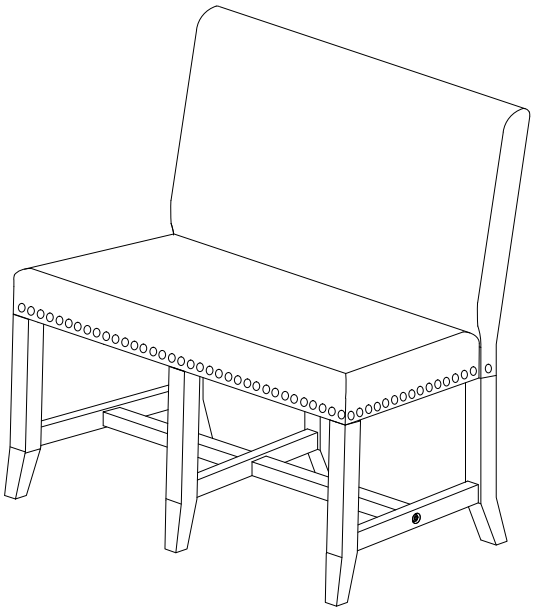

ASSEMBLY COMPLETE

LIVING SPACES

OWNER'S MANUAL

JAXON GREY UPHOLSTERED HIGH BACK BENCH
LIVING SPACES SKU : 202290
VENDOR ITEM NO. : 7YU669

Scan QR code to view assembly video

WARNING:

- Maximum distributed load capacity: 600 lbs.
- Standing or jumping on this product may result in damage or injury.
- This product is designed for use in a normal seated position with all legs contacting the floor. Unintended use may result in damage or injury.

ROUTINE MAINTENANCE:

Periodically check all fittings and tighten if necessary, as they can loosen over time.

CARE AND CLEANING:

UPHOLSTERY:

Avoid exposing your furniture to strong sunlight. Prolonged exposure to direct sunlight can fade the finish of your furniture. To clean spots and stains, please follow instructions per the fabric cleaning code. An annual professional cleaning is recommended to keep your upholstery looking its best.

SOLID WOOD FURNITURE:

Congratulations on purchasing this handcrafted solid wood furniture product. Please keep in mind that wood is sensitive to changes in humidity. As the weather changes so does the relative humidity in your home and the moisture content of your solid wood furniture. We have taken every precaution to stabilize the lumber used to build this product. Still, you may observe plank movement or small cracks as the seasons change, particularly during the first 6-12 months of ownership. This is normal for solid wood furniture and will not affect the performance or longevity of this product.

Dust frequently with a clean, damp, lint-free cloth. Frequent dusting will remove abrasive build-up which can damage a finish over time. Avoid using oily polishes or waxes. Avoid exposing your furniture to strong sunlight. Prolonged exposure to direct sunlight can fade the finish of your furniture. Do not expose your furniture to any liquids. Never allow water to sit on your furniture. Do not place hot items on top of surface, always use a mat or other protector. Alcohol, nail polish and perfume are also dangerous, as they can dissolve the furniture finish on contact and may require professional repairs.

LIVING SPACES

OWNER'S MANUAL

JAXON GREY UPHOLSTERED HIGH BACK BENCH
LIVING SPACES SKU : 202290
VENDOR ITEM NO. : 7YU669

Scan QR code to view assembly video

IDENTIFY AND CORRECT WOBBLY SEATING PRODUCTS:

Our seating products are tested on a leveling table prior to packaging. If after unpacking and/or assembly your chairs wobble, follow these steps to eliminate it:

1. If your chair is fitted with leveling feet, adjust them to eliminate the wobble. Please contact us for replacement levelers if yours are missing or damaged.
2. Verify floor protectors on the underside of the chair have not become loose or damaged during transit or assembly. Please contact us if you need replacement floor protectors.
3. Although they appear flat, all floors are uneven. Verify the floor is not causing the wobble by testing the chair in other positions. If you have multiple pieces of the same chair, some that wobble and some that don't, try reversing their positions. This will isolate whether the chair or the floor is causing the wobble.

The following steps apply to ready-to-assemble chairs only:

4. Check assembly fittings. Turn the chair upside down. Apply light to medium cross pressure to each leg, stretcher or other component to test whether it is installed tightly. Use tools indicated in the assembly instructions to tighten fittings as necessary.

5. Ready-to-assemble furniture is designed with small tolerances to facilitate assembly. Occasionally these tolerances can create a wobble, which can be eliminated by reseating the assembly hardware as follows:
   a. Loosen all fittings a few turns until they are hand tight. Fittings need to be loose enough to be reseated but tight enough to retain their position while they are being re-tightened.
   b. Place the chair upright on a level surface
   c. Apply downward pressure on the seat, especially over and around legs that may appear to be longer than the others. Depending on the tightness of the bolts it may require significant pressure or multiple attempts to seat the bolts correctly.
   d. Once the wobble is corrected, carefully reposition the chair so that assembly fittings are accessible. Being careful not to unseat fittings from their new positions, re-tighten the bolts with tools indicated in the assembly instructions.