ASSEMBLY INSTRUCTION
INSTRUCCIONES

2630SET (COUNTER HEIGT TABLE)
2630SET (MESA ALTA DE MOSTRADOR)

PARTS KYE / LIST DE PARTES			
A		TABLE TOP	1 pc
B		MIDDLE SHELF	1 pc
C		APRON	1 pc
D		LEG	4 pcs
E		CONNECT BOARD	2 pcs

HARDWARE LIST (JUEG DE HERRAMIENTAS)			
F	SHORT BOLT Ø 1/4" X 20 X 1-15/16"		12 pcs
G	LOCK WASHER 1/4"*13mm		12 pcs
H	FLAT WASHER 1/4"*19mm		28 pcs
I	DOWEL		2 pcs
J	SCREW 30mm		16 pcs
K	ALLEN KEY		1 pc

STEP 1 (PASO 1)

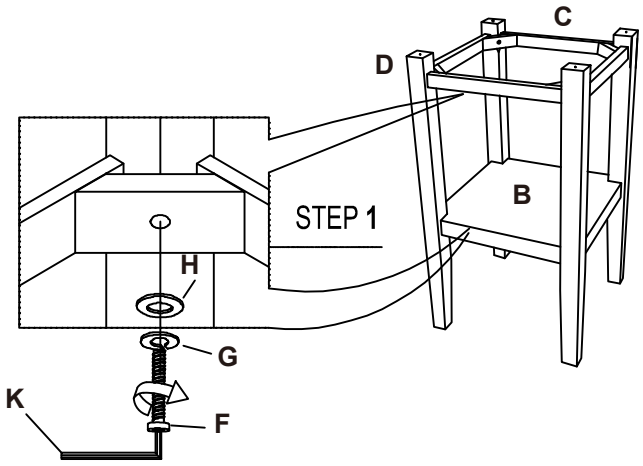

STEP 2 (PASO 2)

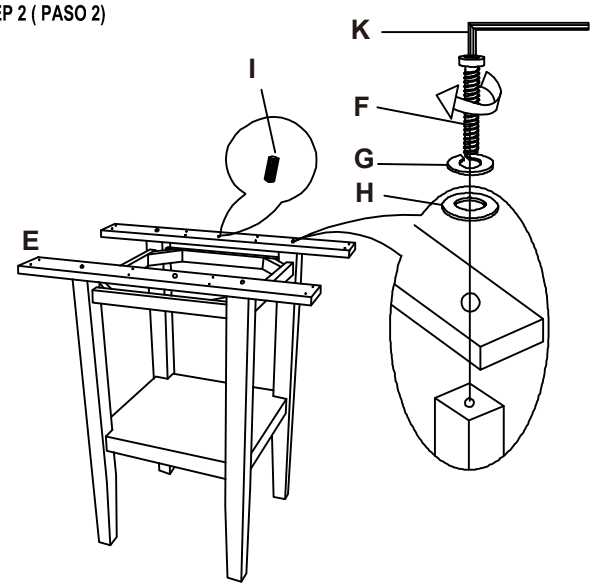

STEP 3 (PASO 3)

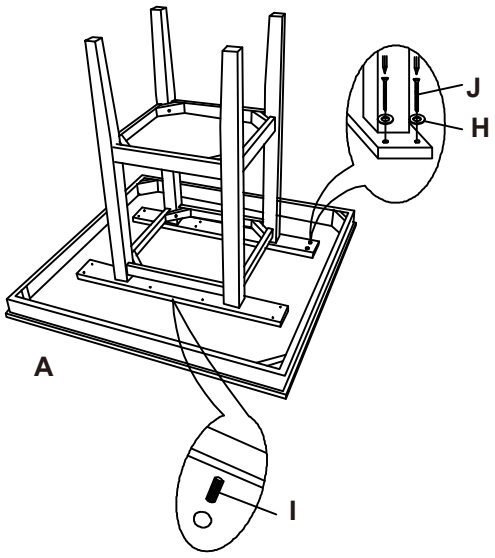

FINISH (FIN)

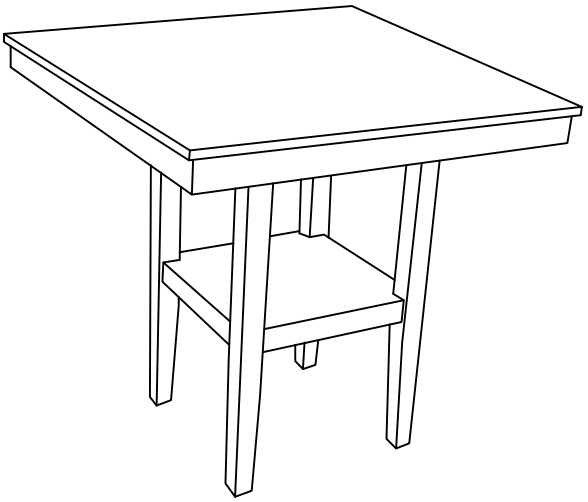

DO NOT TIGHTEN ALL BOLTS UNTIL COMPLETELY ASSEMBLED
NO APRETER LOS TORNILLOS HASTA ARMAR COMPLETAMENTE

ASSEMBLY INSTRUCTION
INSTRUCCIONES

2630SET(COUNTER HEIGT CHAIR)
2630SET(SILLA ALTA DE MOSTRADOR)

PARTS KYE/LIST DE PARTES			
A		CHAIR BACK	1PC
B		SEAT FRAME WITH SEAT CUSHION	1PC
C		RIGHT LEG	1PC
D		LEFT LEG	1PC
E		LEFT SIDE STRETCHER	1PC
F		RIGHT SIDE STRETCHER	1PC
G		FRONT STRETCHER	1PC

HARDWARE LIST (JUEG DE HERRAMIENTAS)			
H	SHORT BOLT 1/4"*20*1-1/2" (chair back center)		2PCS
I	LONG BOLT 1/4"*20*3-1/8" (chair back leg center)		4PCS
J	HEX NUT 5/16"*1/2"		4PCS
K	LOCK WASHER 5/16"*13mm		4PCS
L	FLAT WASHER 5/16"*19mm		4PCS
M	LOCK WASHER 1/4"*13mm		6PCS
N	FLAT WASHER 1/4"*19mm		6PCS
O	SCREW 45mm		6PCS
P	ALLEN KEY		1PC
Q	WRENCH		1PC

STEP 1 (PASO 1)

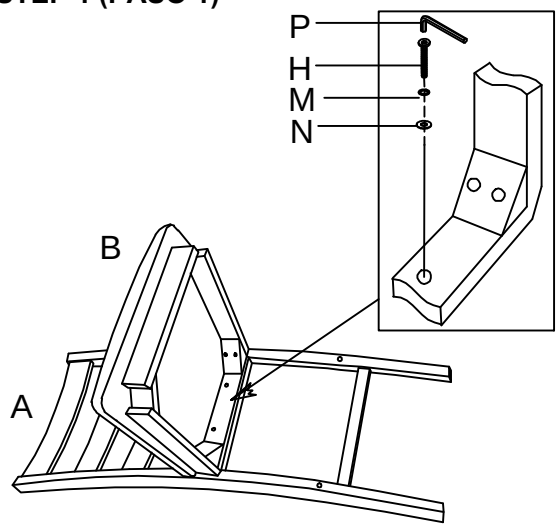

STEP 2 (PASO 2)

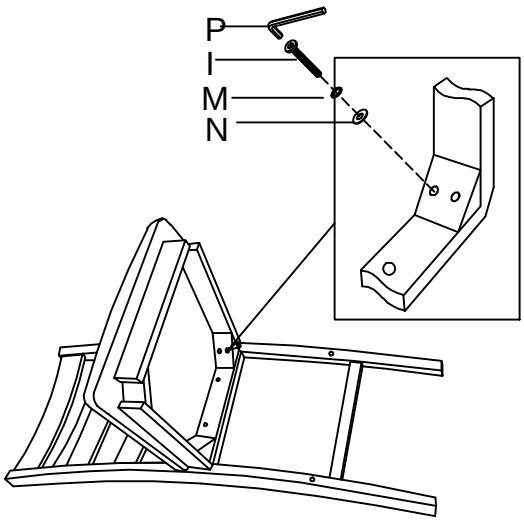

STEP 3 (PASO 3)

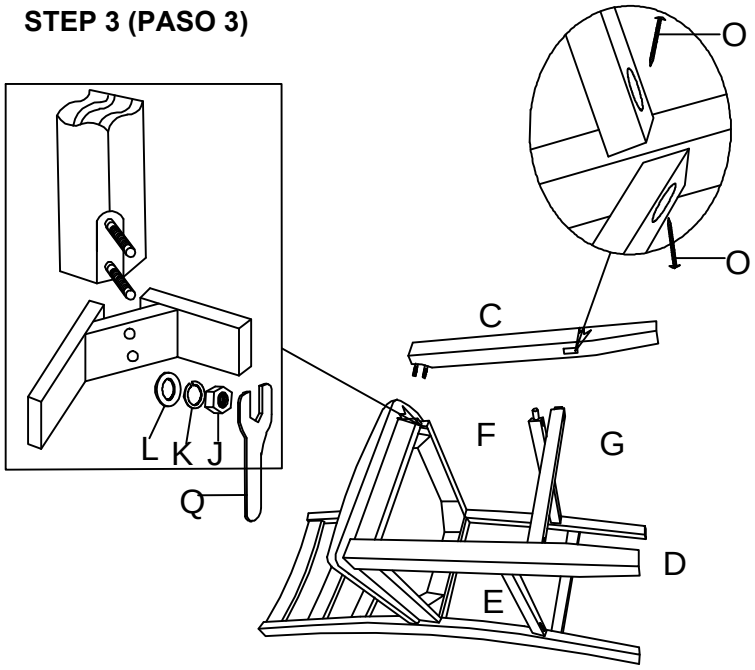

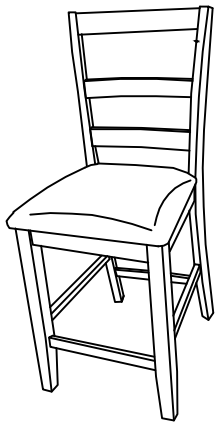

DO NOT TIGHTEN ALL BOLTS UNTIL COMPLETELY ASSEMBLED
NO APRETER LOS TORNILLOS HASTA ARMAR COMPLETAMENTE